General Catalog

Lightning Protection ver.2

SANKŌSHA

General Catalog Lightning Protection ver.2

SANKOSHA Corporation

C O N T E N T S

Our total solution encompasses the three core businesses of lightning protection, Telecommunications and environmental countermeasures.

At Sankosha, we have worked to protect people and society from natural disasters through our core businesses of lightning protection, telecommunications and environmental countermeasures.
Not only in Japan, but around the globe, we at Sankosha continue to work with our customers to deliver safety and security to an advanced information society as the world's only comprehensive lightning protection company, through every kind of service, from lightning observation to lightning protection.

Lightning protection solutions

- SPD, GDT, semiconductor lightning protection elements
- Power supply SPD, lightning transformers
- Earthing enhancing compounds, earthing electrodes, lightning - proof cables
- Lightning protection consulting

Environmental countermeasure solutions

- Lightning strike positioning devices
- Lightning detection and observation devices
- Lightning and weather information
- Energy saving system products

TOTAL SOLUTION

Tele-communications network solutions

- Optical termination boards, optical closures
- MDF, IDF, terminal boards (TE products, R&M products)
- Control consoles
- Obstruction light systems

Company Profile

Name SANKOSHA Corporation
President Masayoshi Ito
Founded April, 1930
Paid-in Capital ¥975,000,000
Employees 893 (Group total) (2016.3)
Address

■Head Office
4-3-8 Osaki, Shinagawa-ku, Tokyo 141-0032
Phone:+81-3-3491-7181 Fax:+81-3-3494-7574

■Overseas Offices

●U.S.A.
□SANKOSHA U.S.A., INC.
406 Amapola Avenue, Suite 135, Torrance, CA90501, U.S.A.
Phone:+1-310-320-1661 FAX:+1-310-618-6869

●THAILAND
□SANKOSHA ENGINEERING (THAILAND) CO., LTD.
BB Building, 20th Floor, 54 Sukhumvit 21 (Asoke) Road, Klongtoey-Nua, Wattana Bangkok, 10110, Thailand
Phone:+66-2-258-1685 FAX:+66-2-047-3224

●INDONESIA
□P.T. SANKOSHA INDONESIA
Interchange Toll Karawang Timur, Desa Anggadita, Klari Karawang 41371 Jawa Barat Indonesia
Phone:+62-267-433-888 FAX:+62-267-433-666

●SOUTH KOREA
□SANKOSHA KOREA CORPORATION
1609 STX-W Tower Guro-dong,90,Gyeoninnno-53,Guro-gu,Seoul,Korea
Phone:+82-2-6124-3777 FAX:+82-2-6124-3779

●VIETNAM
□SANKOSHA VIETNAM
6th Floor, Thang Long Tower, 98A Nguy Nhu Kontum Str, Thanh Xuan Dist, Hanoi S.R. Vietnam
Phone:+84-4-3208-0004 FAX:+84-4-3208-0002

●CHINA
□GUANGZHOU SANKOSHA LIGHTNING PROTECTION TECHNOLOGY CO., LTD
3rd floor A2 plant Wan An Industry Park, No110, Lanbei Road Lan He town, Pan Yu District, Guangzhou City, Guangdong, China
Phone:+86-20-34969113 FAX:+86-20-34969184

□JYUNKOH TECHNOLOGY INC.
Yaxi town Gaochun County Nanjing City China
Phone:+86-25-57843066 FAX:+86-25-57843990

□SANKOSHA HONG KONG LIMITED
Flat 11 & 12A, 9/F., Shatin Galleria, 18-24 Shan Mei Street, Fotan, Shatin, New Territories,. Kowloon, Hong Kong.
Phone: + 85-2-2890-1788 FAX: +85-2-2890-1798

■Domestic Branches in JAPAN

□Sagami Techno Centre
1-1-12 Miyashimo Sagamihara-shi,Kanagawa JAPAN
□Hokkaido Sales Branch Sapporo-shi JAPAN
□Tohoku Sales Branch Sendai-shi JAPAN
□Chubu Sales Branch Nagoya-Shi JAPAN
□Kansai Sales Branch Osaka-shi JAPAN
□Chugoku Sales Branch Hiroshima-shi JAPAN
□Shikoku Sales Office Takamatsu-shi JAPAN
□Kyushu Sales Branch Fukuoka-shi JAPAN

Businesses

■Lightning protection
Manufacture and sales of SPD, GDT and semi-conductor lightning protection elements
Manufacture, sales and installation of power supply protective devices and lightning transformers
Manufacture, sales and installation of earthing enhancing compounds, earth electrodes, and lightning-proof cables
Lightning protection consulting

■Telecommunications network solutions
Manufacture, sales and installation of optical wiring boards, optical closures, MDF, and IDF
Sales and installation of TE and R&M products
Manufacture, sales and installation of control consoles
Manufacture, sales and installation for obstruction light systems

■Environmental countermeasures
Sales and installation of lightning strike positioning devices
Sales and installation of lightning detection and observation devices
Sales of lightning and weather information
Sales and installation for energy saving system devices

Construction business licences

■Special construction
Electrical construction

■General construction
Construction work, electrical communications construction, building construction, etc.

Main customers

Central government ministries – organizations – local prefectures, cities and towns/ Electrical and gas companies/ oil companies – oil storage facilities/ Railroad companies – signal manufacturers/ Telecommunications companies – mobile telephone companies/ Manufacturers (electrical – telecommunications – general)/ Constructors (electrical – telecommunication)/ Hospitals – universities – trading companies – broadcasting – leisure

ISO accreditation

■March, 1998 Quality Management System ISO 9001 accredited
Registration No: JQA-2218

■October, 2002 Environmental Management System ISO 14001 accredited
Registration No: JQA-EM2683

As experts in comprehensive lightning countermeasures, we

What is lightning?

◇ How lightning happens

Lightning is a natural phenomenon, similar to static electricity.

Lightning occurs when there are unstable atmospheric conditions. When cold air enters the upper atmosphere and there are updrafts caused by the earth's surface being heated by the sun, then thunderclouds will be formed. When the temperature inside the cloud is between minus 10°C and minus 20°C, droplets of ice are formed and collide with each other in the updrafts. When they collide, charge separation occurs and small light ice droplets become positively charged and are carried into upper atmosphere by updrafts.

The larger droplets become negatively charged and accumulate at lower levels due to the gravity. When the negative charge at the base of the cloud reaches a certain value as the thundercloud develops, electrical discharge occurs within the cloud and between the cloud and the surface of the earth. This is lightning. Since the release of energy takes place in an instant, it is accompanied by intense light (lightning) and sound (thunder).

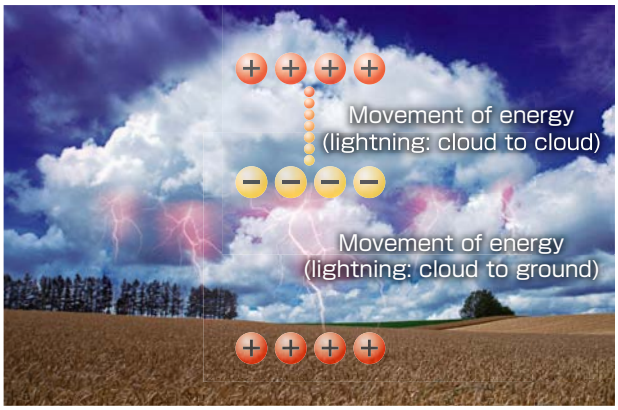

◇ Summer lightning and winter lightning

Winter lightning can sometimes discharge more energy than summer lightning

Most lightning occurs in the summer (summer lightning), but it can also occur in winter, and is called winter lightning.

Compared to summer lightning, winter lightning forms in comparatively low thunderclouds, so lightning strikes tend to concentrate on buildings and structures. Also, the electrical discharge during these lightning strikes lasts for a comparatively long time, releasing a great amount of energy, with a tendency for greater lightning damage.

Example of summer lightning (downward discharge)

Example of winter lightning (upward discharge)

*Winter lightning is mostly upward discharge

at Sankosha work to address our customers' diverse needs.

◇ Increased lightning damage

In the information society, communication equipment has become more compact because of the spread of digital communication equipment that uses many electronic parts and components, and it tends to be more vulnerable lightning than analogue equipment. In the ICT society, communication networks are spreading everywhere, and so are many types of communication cables. This means that there are many more entry routes for lightning, and a greater possibility of suffering lightning damage.
Lightning surge entry routes can vary greatly depending on the conditions, and this is why it is important to cover every imaginable entry route when planning lightning countermeasures.

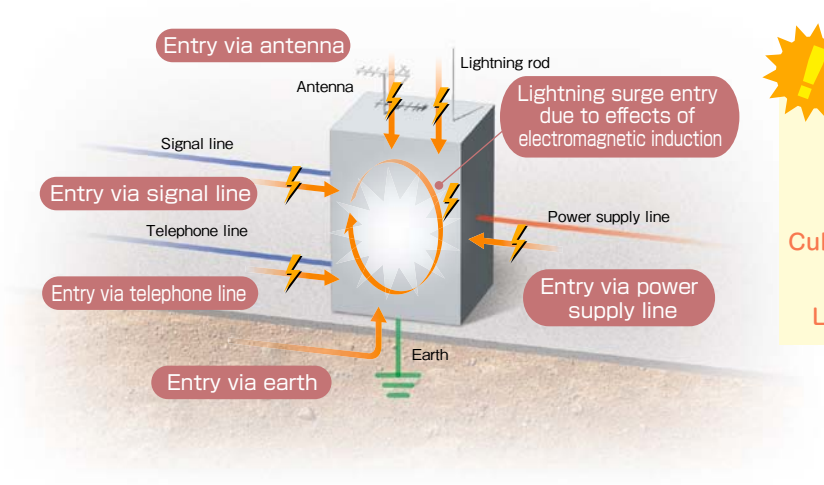

- Human injury
- Lifelines damage or cut
- Public utility services stop
- Production facilities damage stop
- Cultural heritage sites damage or destruction
- PC data damage or destruction
- Lightning damage to ordinary households

Many other kinds of damage are possible!

◇ Direct lightning and induced lightning

Direct lightning is that lightning directly strikes buildings and other objects on the ground. When an extremely large lightning current is formed, it changes not only into electrical energy but also into heat and mechanical energy momentarily, and is discharged with explosive force, causing damage to various types of equipment and machinery.
Induced lightning is lightning surge (transient abnormally high voltage current) that is caused from communication and electrical power lines, and can enter via power supply lines, communication lines and earthing, etc. Most lightning damage is caused by induced lightning which destroys communication equipment and computers, and sometimes even power supplies, and therefore, the number of cases of lightning damage has risen dramatically in recent years.

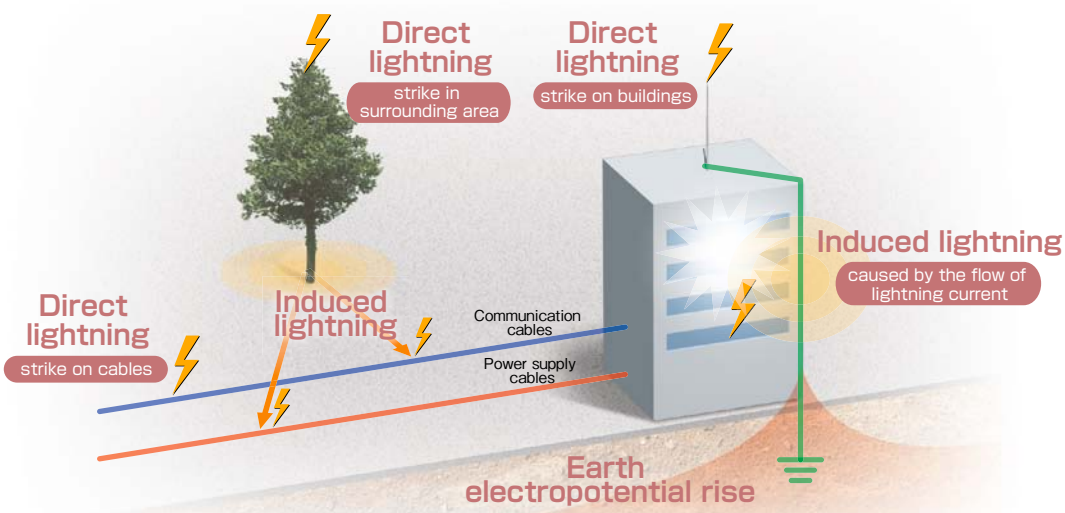

Lightning can strike anywhere.
Strong magnetic fields and voltage are generated in the areas surrounding a lightning strike point, and can become the cause of induced lightning.

IEC lightning countermeasure overview

◇ Lightning Protection Zones (LPZ)

IEC classifies the different levels of lightning effect into Lightning Protection Zones (LPZ), and by installing suitable SPD at each zone boundary, the damage to equipment can be minimized.

Lightning Protection Zone (LPZ)			Lightning Protection Zones and SPD classes and categories	
External zone	LPZ 0A	A zone outdoors and outside the protection range of an external lightning protection system. When structures are struck directly by lightning, they may be subjected to the full lightning current.	LPZ 0A and the boundary between LPZ 0B and LPZ 1	Class Ⅰ,Ⅱ Category C2, D1
	LPZ 0B	A zone outdoors and within the protection range of an external lightning protection system. Structures are not struck by lightning directly, but may be subjected to non-attenuated lightning charge.		
Internal zone	LPZ 1	A zone indoors and within the protection range of an external lightning protection system. Structures may be subjected to partial direct lightning strikes, but the effects of the lightning current and electromagnetic fields are mitigated.	The boundary between LPZ1 and LPZ 2+	Class Ⅱ, Category C2
	LPZ 2	A zone inside a building and where there is a need to mitigate the effects of lightning current and electromagnetic fields to an even greater extent than in LPZ1.		
	LPZ 3		The boundary between LPZ2 and LPZ 3	Class Ⅱ,Ⅲ Category C1,C2

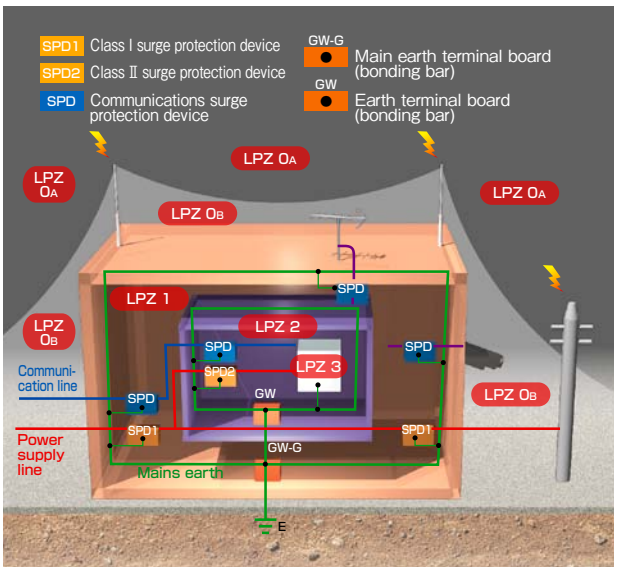

◇ Protecting against direct lightning strikes

IEC defines direct strike lightning current as having a 10/350 μs waveform. Lightning energy is represented by the area of the waveform illustrated below. It can be seen that, compared against an inducted lightning current waveform (8/20 μs), this is an extremely large force of energy.

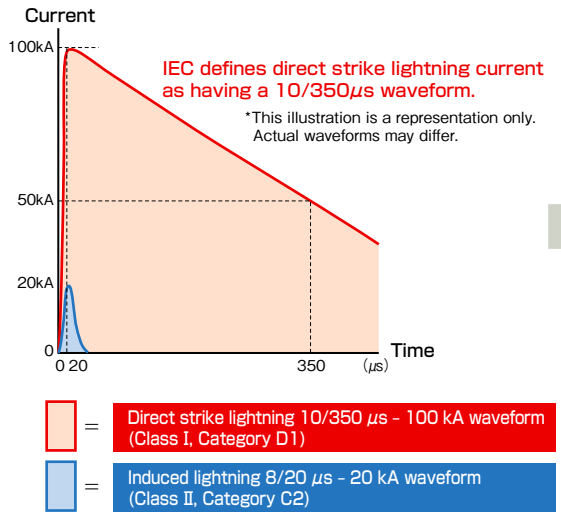

SPD performance marks (Classes, Categories)

	SPD performance mark samples	
	For direct lightning	For induced lightning
	For 10/350 μs lightning current Installed at LPZ 0/1 boundary	For 8/20 μs lightning current Installed at LPZ1/2 boundary
For low voltage power supplies	Class Ⅰ	Class Ⅱ
For communications - signal lines	Category D1	Category C2

- Class Ⅰ and Class Ⅱ are test grades for low voltage power supply SPD.
- Categories D1 and C2 are test grades for communications and signals (in addition, there are also Categories A, B, etc.)
- Class Ⅲ test grade is by 1.2/50μs・8/20μs combination waveforms.

◇ Setting of protection levels

IEC stipulates four protection levels (lightning countermeasure levels), according to the importance of the building and equipment and the degree of hazard.

Protection Level *1	Protection efficiency	Lightning current peak value (10/350μs)	Max. current to SPD (10/350μs) *2
Ⅰ	98%	200kA	100kA
Ⅱ	95%	150kA	75kA
Ⅲ	90%	100kA	50kA
Ⅳ	80%	100kA	50kA

*1 The protection level can be selected by the contractor after considering the lightning risks.

*2 Assuming 50% to earth, 50% to service line.

Comprehensive Lightning Countermeasure Systems

◇ Total solutions

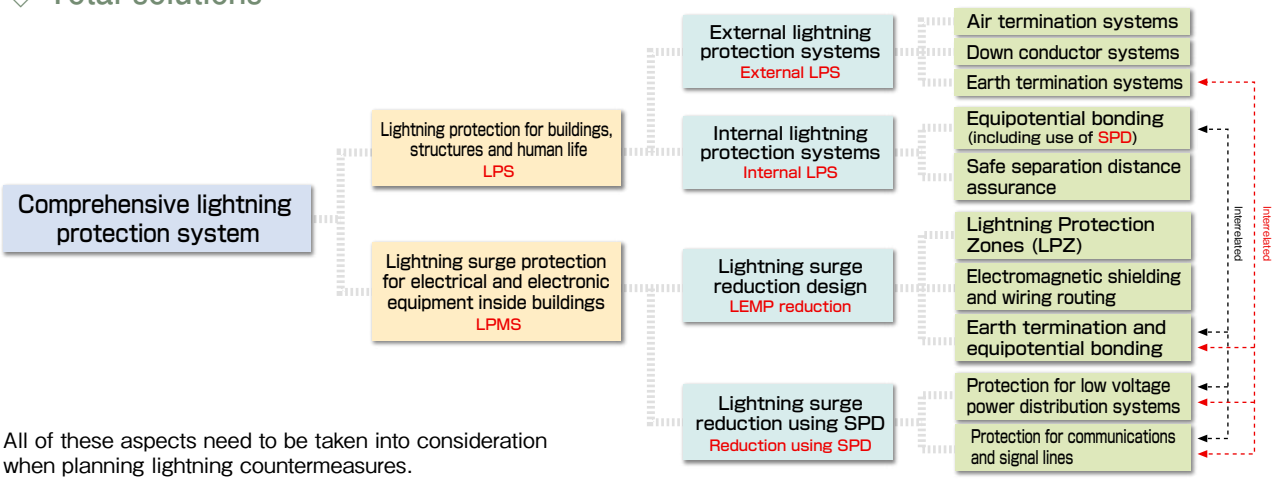

All of these aspects need to be taken into consideration when planning lightning countermeasures.

◇ Comprehensive lightning protection system

As a comprehensive lightning protection company, Sankosha works to solve all kinds of problems caused by lightning strikes.

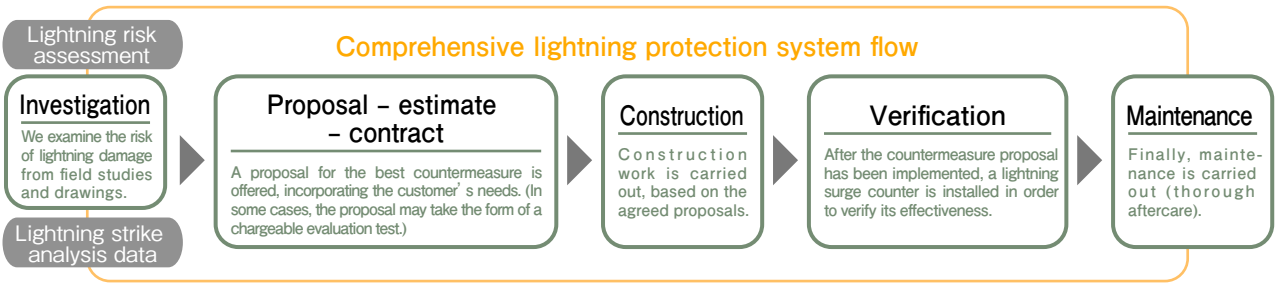

Lightning risk assessment

Our lightning risk diagnostic programs range from simple diagnoses to expert diagnoses. The simple diagnosis is available on CD ROM. Based on the customer's answers to approximately 20 questions, we prepare a diagnostic report.

・Expert diagnosis

We ask the customer for information that shows the conditions of to the local environment, electrical plant and equipment, instrumentation, earthing systems, and management. Also, if equipment has been damaged or destroyed, the expert diagnosis will proceed more smoothly (where necessary, an on-site inspection will be conducted) with the manufacturer's equipment damage report. Based on the results of the diagnosis, we can determine the degree of lightning risk and propose the optimal countermeasures.

・Simple diagnosis

We examine five elements in order to assess lightning risk.

a. Local environmental conditions
b. Air terminating systems
c. Communications and control systems
d. Earth termination
e. Safety management systems

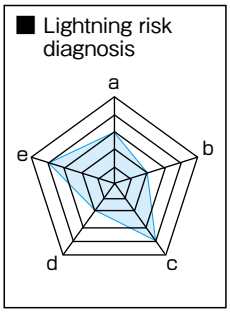

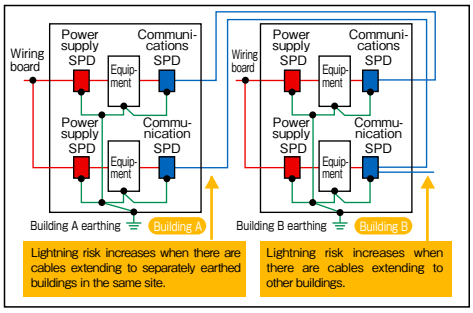

Lightning protection for wind farms

The biggest cause of damage to windmills is natural causes, especially lightning strike is the most common cause of all. It is no exaggeration to say that lightning strike is the biggest threat to wind farms.

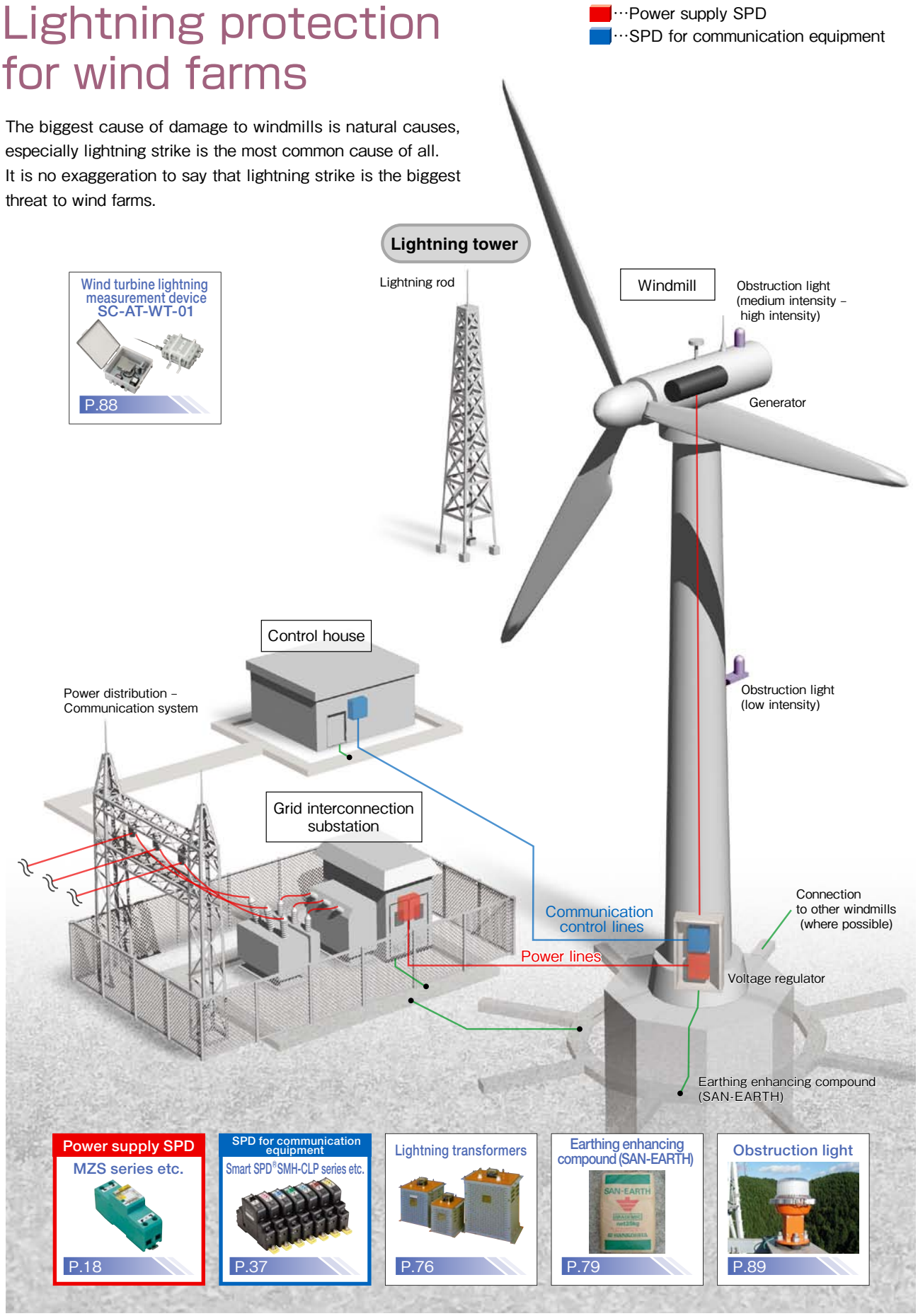

Note: This lightning countermeasure diagram is for the purposes of showing the required SPD items, and does not necessarily represent an accurate lightning countermeasure. Please consult our experts for details on lightning protection systems.

Lightning protection for solar power installations

…Power supply SPD
…SPD for communication equipment
…SPD for LAN

Solar power is attracting attention as a source of clean energy. However, solar power generating systems that are set up outdoors are prone to lightning damage, and lightning protection countermeasures are essential to their efficient operation. With solid technical skill that has won the industry's top share, Sankosha's countermeasures prevent damage from spreading to power conditioners and other important equipment, thereby reducing the risk of low capacity utilization.

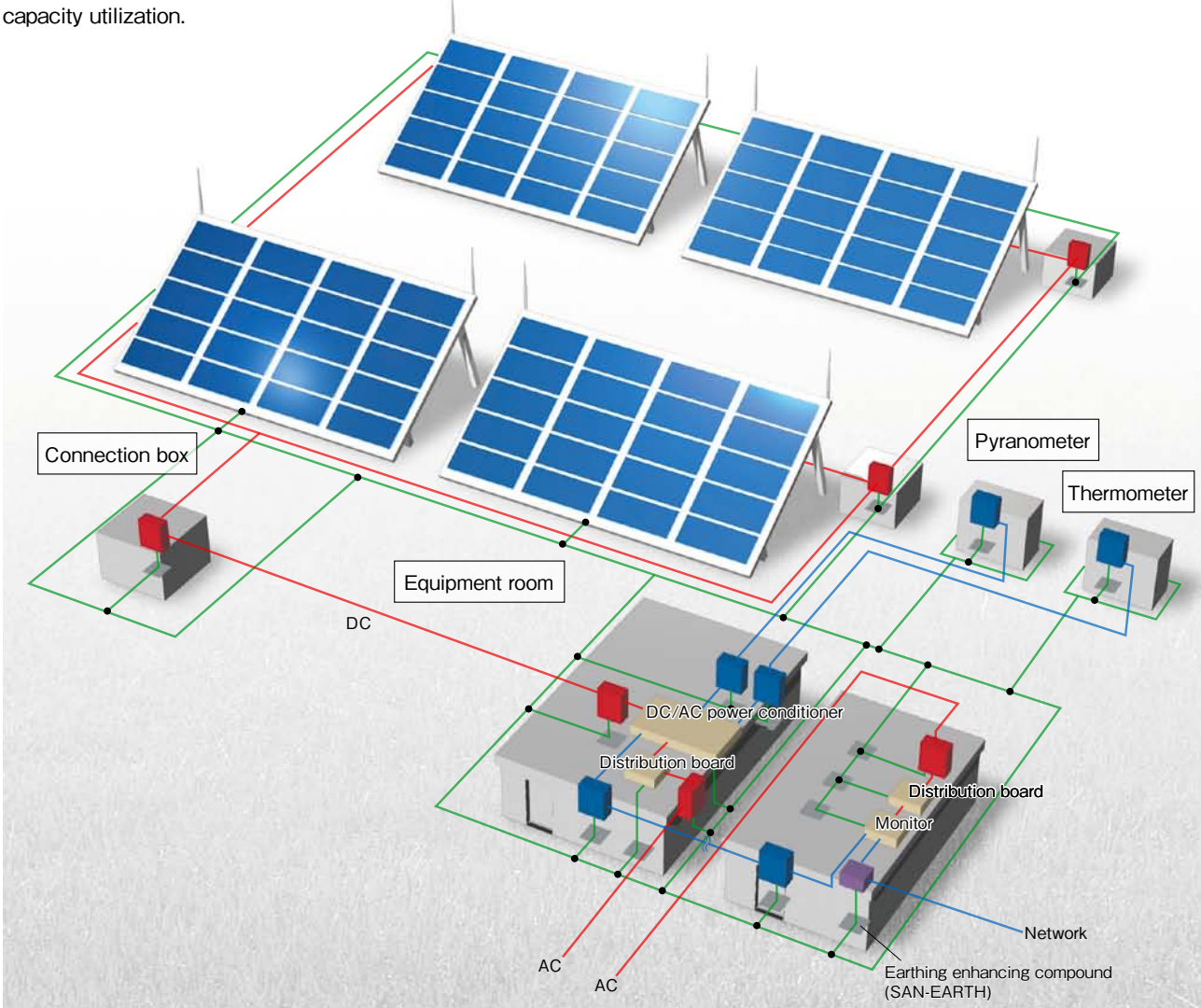

Power supply SPD
Smart SPD® SMBP-MZSR series etc.

P.24

SPD for communication equipment
Smart SPD® SMH-CLP series etc.

P.37

SPD for LAN
LAN-CAT5e-P+ Ⅱ etc.

P.44

Earthing enhancing compound (SAN-EARTH)

P.79

Note: This lightning countermeasure diagram is for the purposes of showing the required SPD items, and does not necessarily represent an accurate lightning countermeasure. Please consult our experts for details on lightning protection systems.

Lightning protection for buildings

With the incorporation of ICT into offices and the spread of networks over wider areas, the threat posed by lightning is growing stronger, and lightning protection countermeasures need to be considered, not only floor by floor, but for whole buildings. At Sankosha, we are able to propose comprehensive lightning solutions that effectively combine external lightning protection systems and lightning protection for electrical and electronic systems, etc.

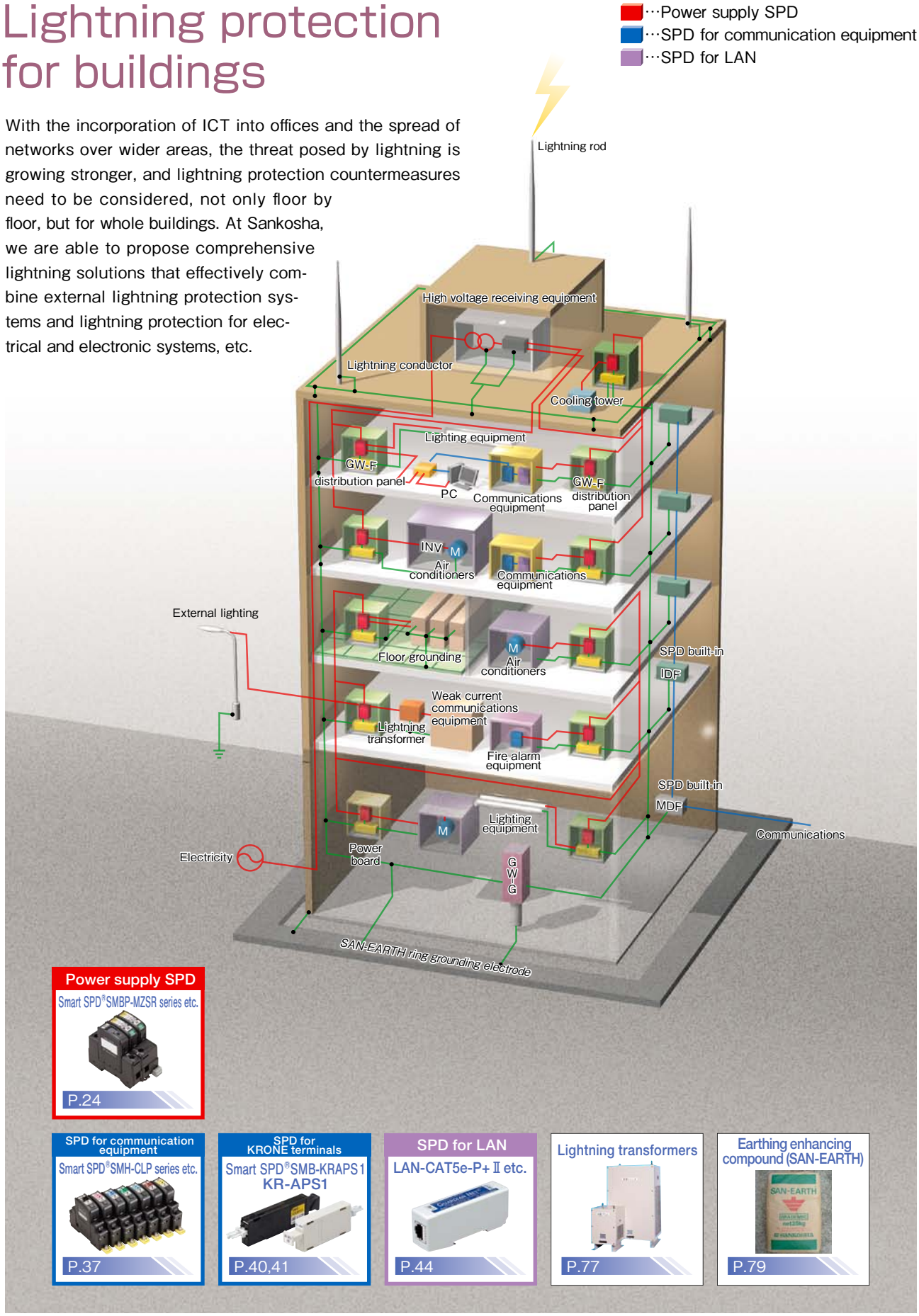

Note: This lightning countermeasure diagram is for the purposes of showing the required SPD items, and does not necessarily represent an accurate lightning countermeasure. Please consult our experts for details on lightning protection systems.

Lightning protection for factories

…Power supply SPD
…SPD for communication equipment

Factory production line stoppages due to lightning damage can cause extremely serious losses. There are many examples of network equipment connected by communication cables being damaged by induced lightning. Factories contain a great deal of equipment of many types. Each type of equipment requires its own countermeasure, and Sankosha addresses this need with a rich lineup of lightning protection products.

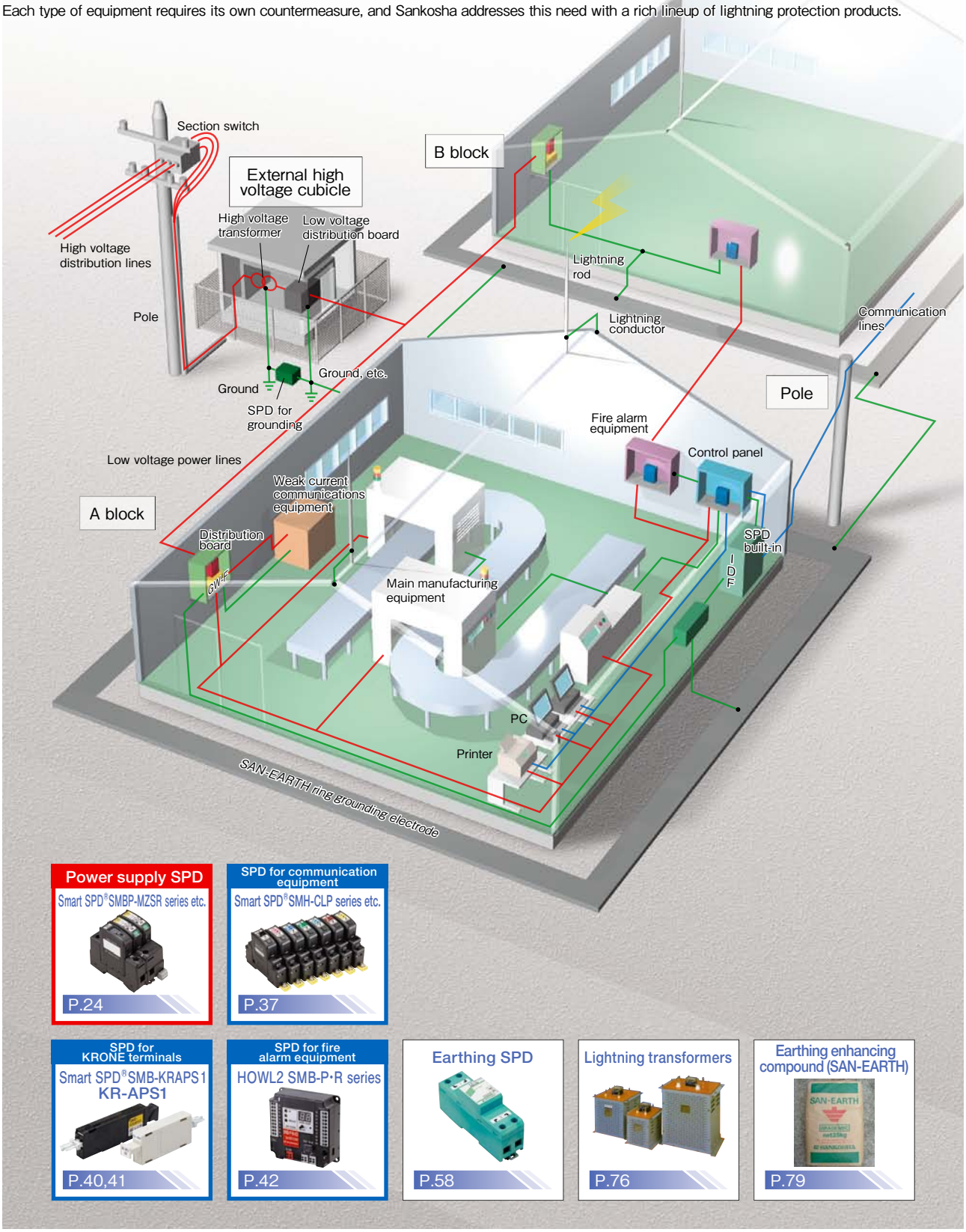

Note: This lightning countermeasure diagram is for the purposes of showing the required SPD items, and does not necessarily represent an accurate lightning countermeasure. Please consult our experts for details on lightning protection systems.

Lightning protection for railways

Railways are a lifeline that is used by many people. Railway signal communications equipment impacts people's lives directly, and needs to have highly reliable lightning protection in place. Backed up by lightning protection technology developed and honed over many years, as well as a considerable track record, Sankosha lightning protection products provide support for railway safety.

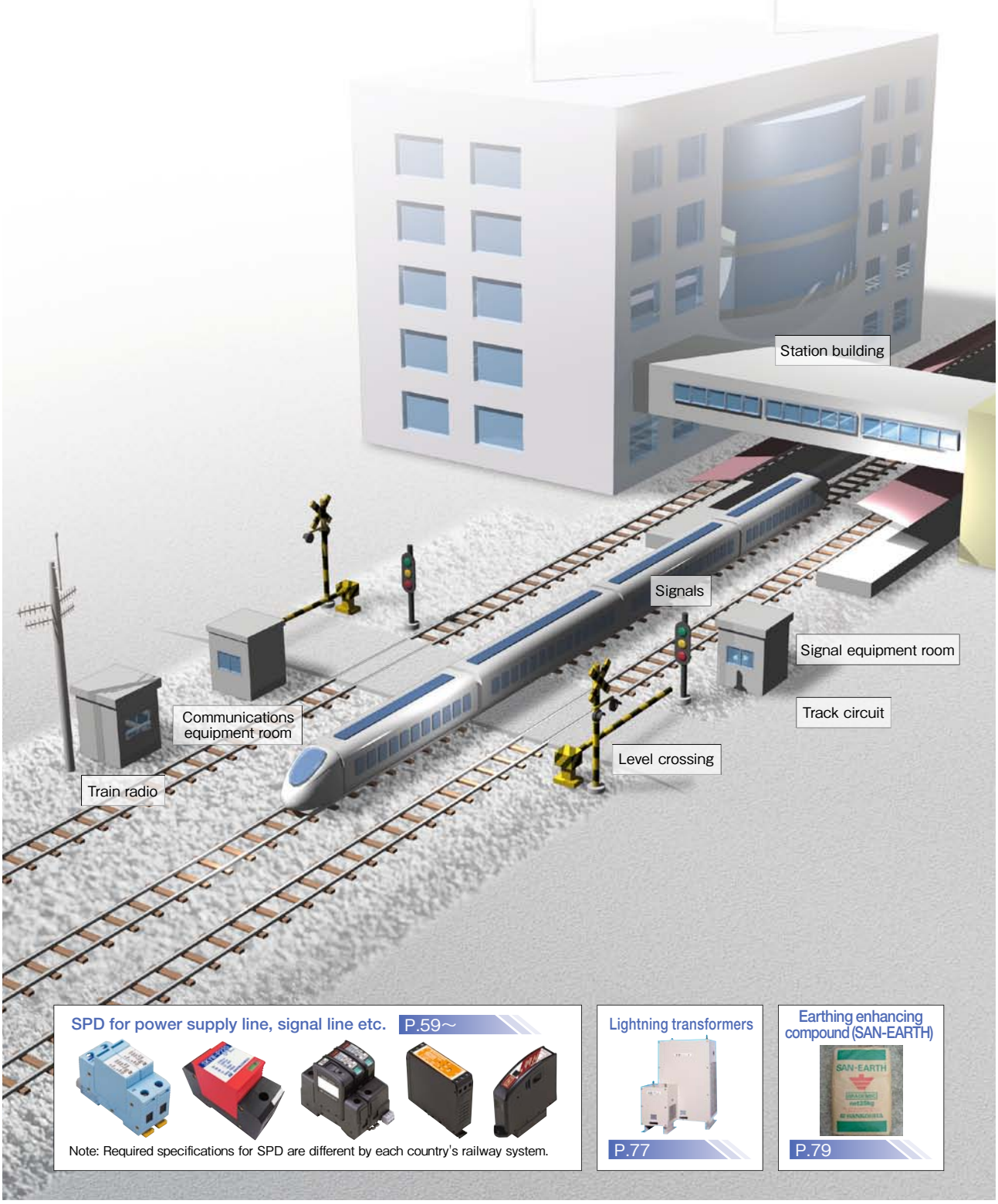

Note: Please consult our experts for details on lightning protection systems.

Lightning protection for fire prevention equipment

…Power supply SPD
…SPD for communication equipment
…SPD for LAN
…SPD for co-axial connectors

Fire and smoke alarms are essential equipment for our safety, and are mandatory in ordinary houses and social welfare facilities, etc. If this important equipment malfunctions due to lightning damage and generates an alarm at the wrong time, it can cause significant distress to the people in the building. By providing the ideal lightning protection solutions for fire prevention equipment, Sankosha continues to contribute to everyone's safety and security.

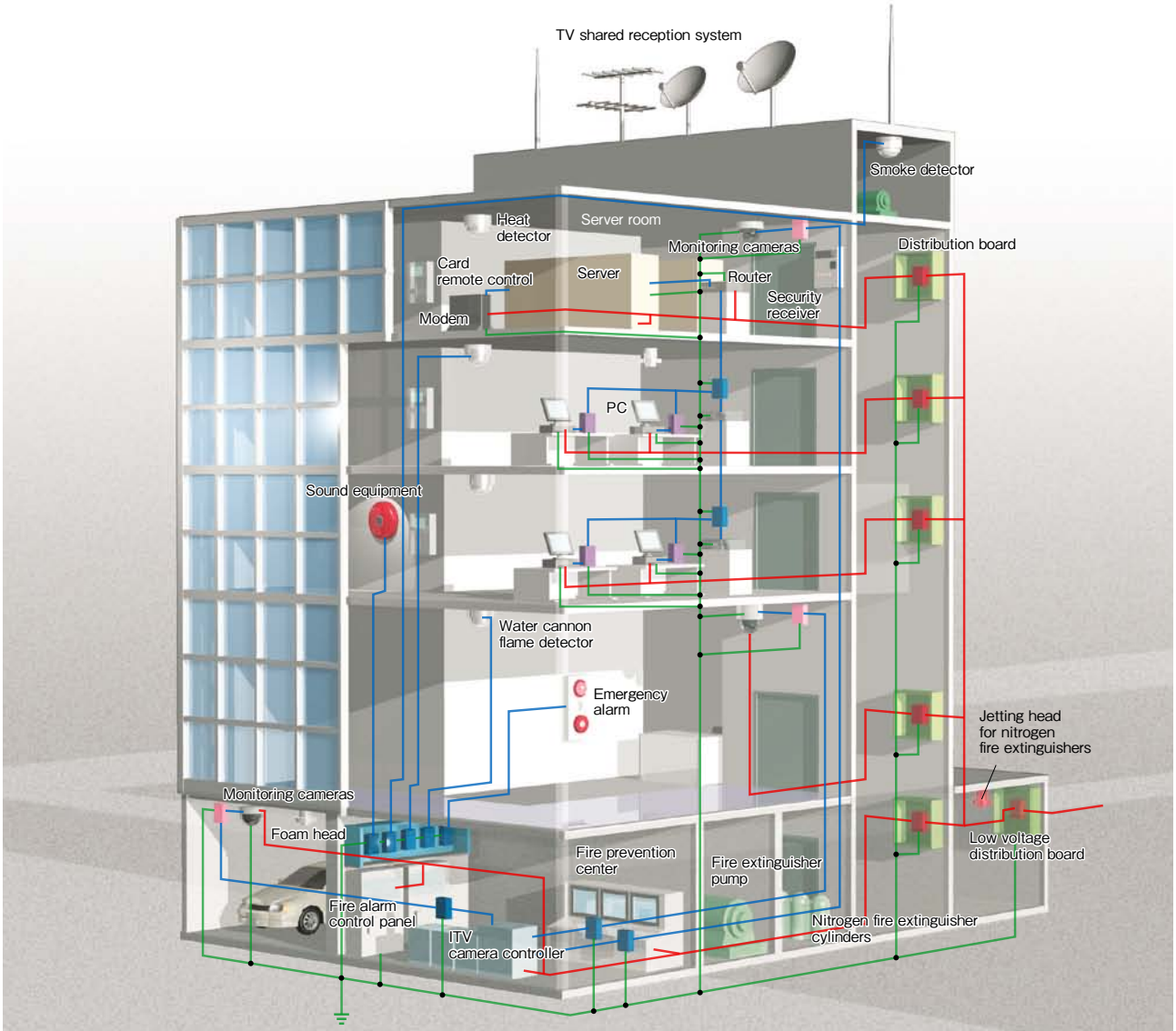

Power supply SPD
Smart SPD® SMBP-MZSR series etc.
P.24

SPD for communication equipment
Smart SPD® SMH-CLP series etc.
P.37

SPD for LAN
LAN-CAT5e-P+ Ⅱ etc.
P.44

SPD for co-axial connectors
CX-E-60 etc.
P.47

Note: This lightning countermeasure diagram is for the purposes of showing the required SPD items, and does not necessarily represent an accurate lightning countermeasure. Please consult our experts for details on lightning protection systems.

Lightning protection for dams

…Power supply SPD
…SPD for communication equipment
…SPD for co-axial connectors

Dam facilities' networks are spread over wide areas and are considered highly vulnerable to lightning surges. In addition to preventing flooding in the event of heavy rain, dams also play an important role in the stable management of water resources. In order to ensure that these highly important public utilities continue to function properly, they need highly reliable lightning protection. Sankosha provides ideal solutions, backed up by original technology and long years of expertise.

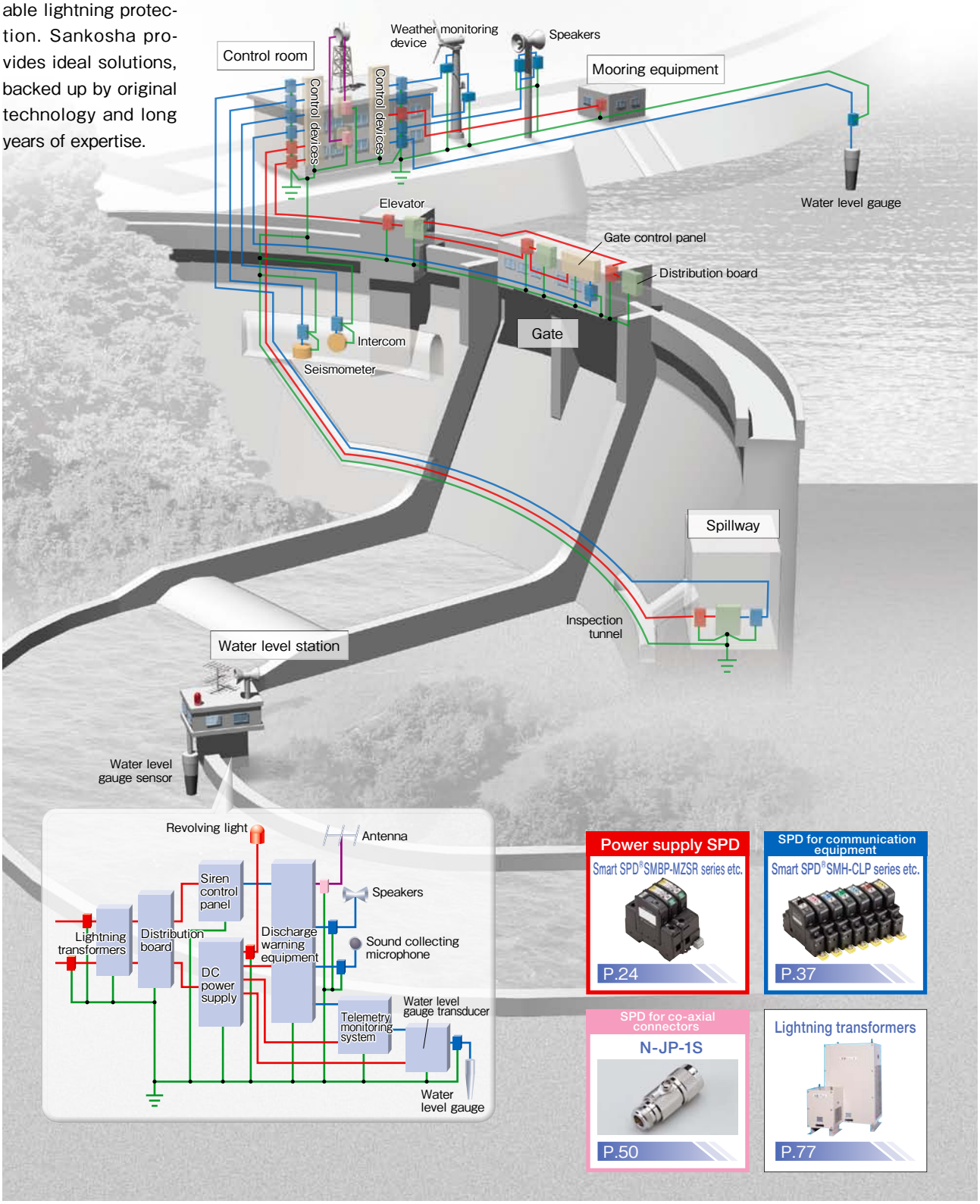

Note: This lightning countermeasure diagram is for the purposes of showing the required SPD items, and does not necessarily represent an accurate lightning countermeasure. Please consult our experts for details on lightning protection systems.

Lightning protection for houses

…SPD for LAN
…SPD for co-axial connectors
…Power supply SPD
…SPD for communication equipment

Lightning damage does not only occur in office buildings and factories. It can happen in ordinary houses. All manner of electrical household appliances, including refrigerators, telephones, TVs and computers, can be damaged by lightning. Sankosha provides protection for your home by delivering lightning protection equipment that can be installed easily without requiring any construction work.

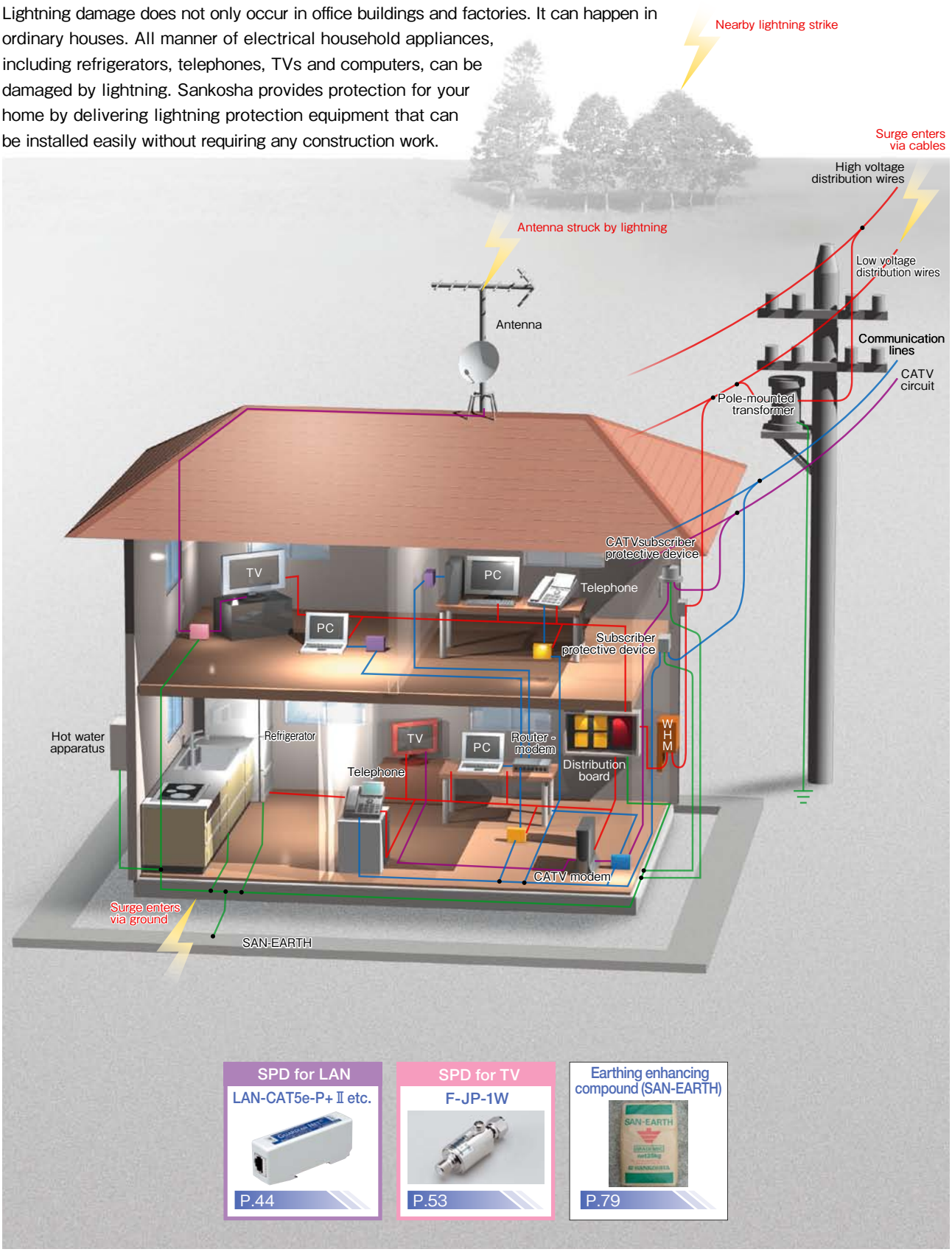

Note: This lightning countermeasure diagram is for the purposes of showing the required SPD items, and does not necessarily represent an accurate lightning countermeasure. Please consult our experts for details on lightning protection systems.

Product lineup

IEC ···IEC Compliant

UL ···UL Compliant

RoHS ···RoHS Compliant

RoHS mark means not to contain the following 6 materials:Cadmium, Lead, Mercury, Hexavalent chromium, Polybrominated biphenyl, Polybrominated diphenyl ether (Excluding 2011/65 / EC)

1 Lightning protection products

P18～

2 Earthing related products

P78～

3 Lightning observation products

P85～

4 Obstruction light

P89～

MZS-230AV

IEC Class Ⅰ/Ⅱ compliant

Conforming standards

- IEC 61643-11 compliant
- RoHS compliant

Features

- Impulse sparkover current up to 25 kA (direct strike waveform 10/350 μs)
- Voltage protection level 2.0kV or less
- High follow current shutoff ability
- Deterioration display function (warning contact output terminal attached)
- DIN rail mountable (35 mm)

Applications

- Low voltage power supply circuits in switchboards and distribution boards (AC 100V/200V)
- Power supply circuits in control equipment (AC 100V/200V)

■Characteristics

Item	Measurement conditions	Performance
Maximum continuous operating voltage (50/60Hz) (Uc)	—	275V
Impulse current (Iimp)	10/350μs	25kA
Short-circuit withstand capability (Isccr)	L-NPE	50kA
Voltage protection level (Up)	Based on IEC	2.0 kV or less

Dimensions: W35×D125×H66 (mm)
Mass: 370 (g)

■External view

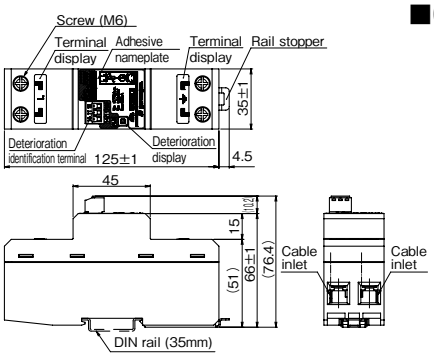

■Circuit diagram

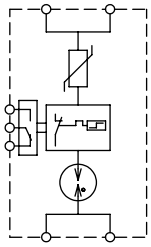

MZS-NPE

IEC Class Ⅰ/Ⅱ compliant

Conforming standards

- IEC 61643-11 compliant
- RoHS compliant

Features

- Impulse sparkover current up to 75 kA (direct strike waveform 10/350 μs)
- Voltage protection level 1.5 kV or less
- DIN rail mountable (35 mm)

Applications

- Low voltage power supply circuits in switchboards and distribution boards (AC 100V/200V)
- Power supply circuits in control equipment (AC 100V/200V)

■Characteristics

Item	Measurement conditions	Performance
Maximum continuous operating voltage (50/60Hz) (Uc)	—	255V
Impulse current (Iimp)	10/350μs	75kA
Nominal discharge current (In)	8/20μs	20kA
Voltage protection level (Up)	Based on IEC	1.5 kV or less

Dimensions: W35×D125×H66 (mm)
Mass: 290 (g)

■External view

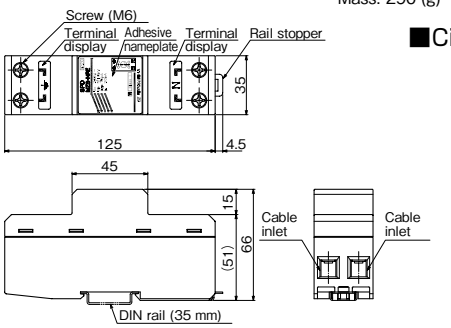

■Circuit diagram

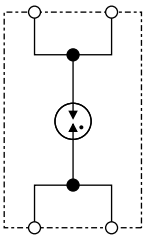

■Installation examples (MZS-200AV + MZS-NPE)

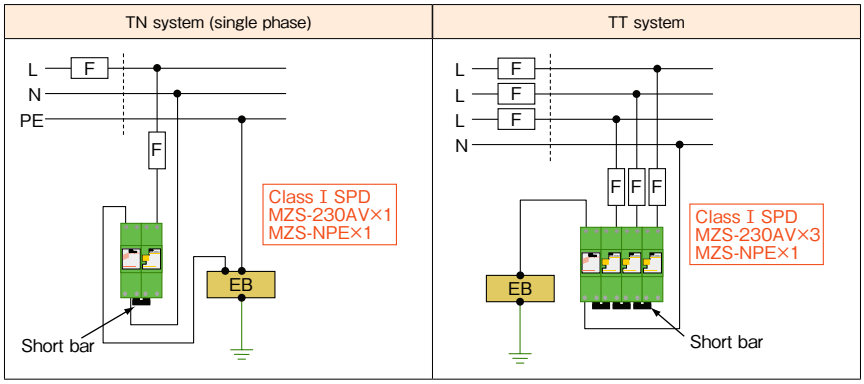

MZS-400AV

IEC Class Ⅰ/Ⅱ compliant

Conforming standards

- IEC 61643-1/IEC 62305-4 compliant
- RoHS compliant

Features

- Impulse sparkover current up to 25 kA (direct strike waveform 10/350 μs)
- Voltage protection level 2.5kV or less
- High follow current shutoff ability
- Deterioration display function (warning contact output terminal attached)
- DIN rail mountable (35 mm)

Applications

- Low voltage power supply circuits in switchboards and distribution boards (AC 400V)
- Power supply circuits in control equipment (AC 400V)

■Characteristics

Item	Measurement conditions	Performance
Maximum continuous operating voltage (50/60Hz) (Uc)	—	460V
Impulse current (Iimp)	10/350μs	25kA
Nominal discharge current (In)	8/20μs	20kA
Voltage protection level (Up)	Based on IEC	2.5kV or less

Dimensions: W70×D100×H65 (mm)
Mass: 460 (g)

■External view

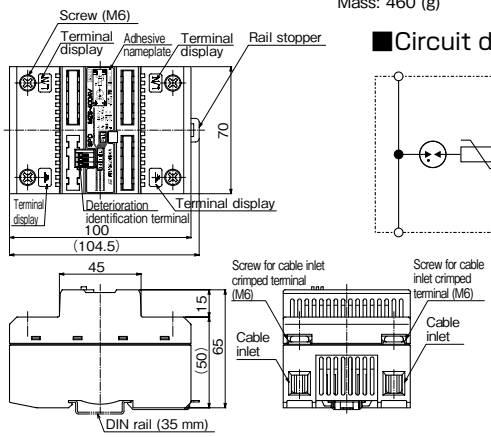

■Circuit diagram

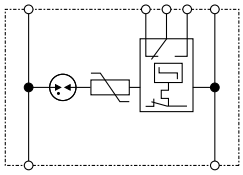

MZS-NPE400

IEC Class Ⅰ/Ⅱ compliant

Conforming standards

- IEC 61643-1/IEC 62305-4 compliant
- RoHS compliant

Features

- Impulse sparkover current up to 75 kA (direct strike waveform 10/350 μs)
- Voltage protection level 1.8 kV or less
- DIN rail mountable (35 mm)

Applications

- Low voltage power supply circuits in switchboards and distribution boards (AC 400V)
- Power supply circuits in control equipment (AC 400V)

■Characteristics

Item	Measurement conditions	Performance
Maximum continuous operating voltage (50/60Hz) (Uc)	—	500V
Impulse current (Iimp)	10/350μs	75kA
Nominal discharge current (In)	8/20μs	20kA
Voltage protection level (Up)	Based on IEC	1.8 kV or less

Dimensions: W35×D125×H66 (mm)
Mass: 290 (g)

■External view

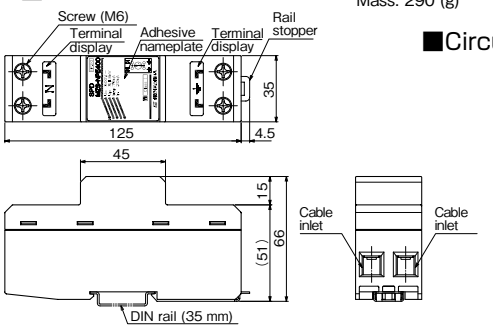

■Circuit diagram

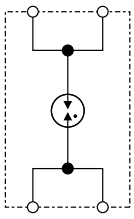

■Installation examples(MZS-400AV + MZS-NPE400)

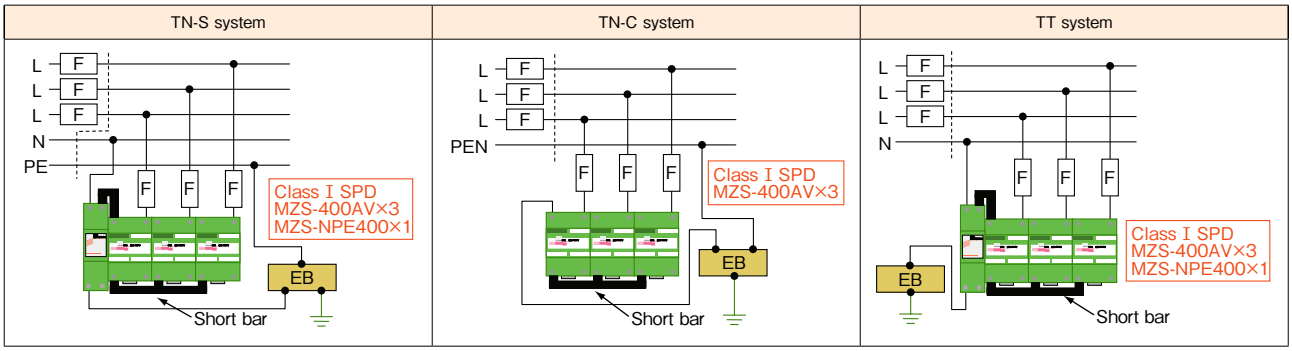

SPD for PV
MZS-300DC
MZS-600DC

IEC ClassⅠ compliant

Conforming standards

- IEC 61643-1/IEC 62305-4 compliant
- RoHS compliant

Features

- Deterioration display function (warning contact output terminal attached)
- DIN rail mountable (35 mm)

Applications

- DC power supply circuits in PV system

(MZS-300DC) Dimensions: W35×D129.5×H72 (mm)
Mass: 370(g)
(MZS-600DC) Dimensions: W70×D104.5×H69 (mm)
Mass: 460 (g)

■Characteristics

Item	Measurement conditions	Performance	
		MZS-300DC	MZS-600DC
Maximum continuous operating voltage (50/60Hz) (Uc)	—	DC300V	DC615V
Impulse current (Iimp)	10/350μs	25kA	
Nominal discharge current (In)	8/20μs	20kA	
Voltage protection level (Up)	Based on IEC	1.5 kV or less	2.5 kV or less

■Circuit diagram

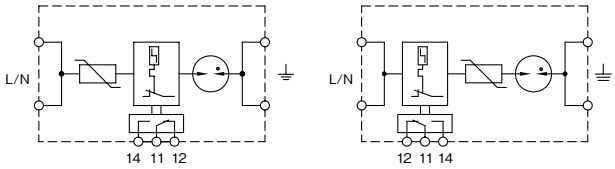

■External view

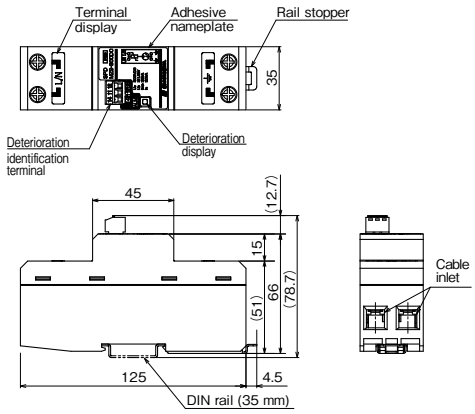

MZS-300DC

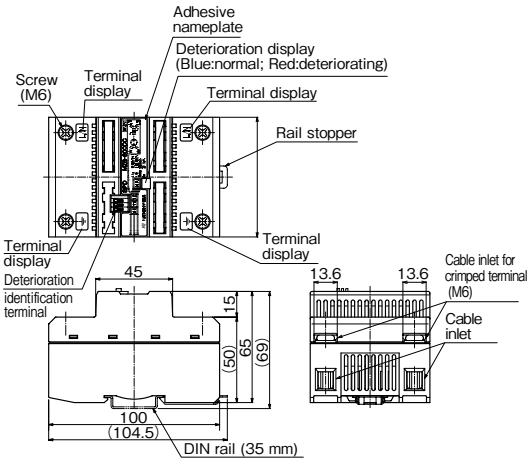

MZS-600DC

■Installation examples (MZS-300DC)

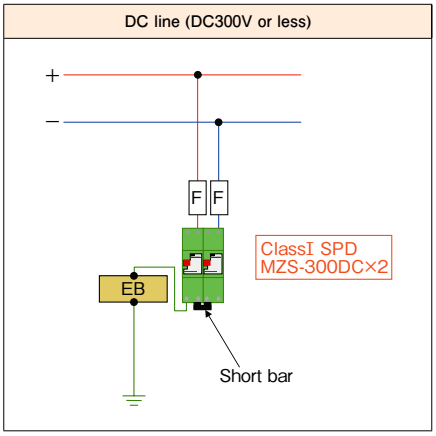

■Installation examples (MZS-600DC)

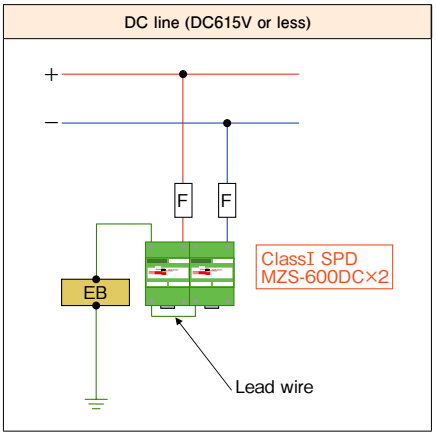

Application and Performance of Power supply SPD IEC Class Ⅰ (Type 1)

Item	Measurement conditions	MZS-230AV	MZS-NPE	MZS-400AV	MZS-NPE400	MZS-300DC	MZS-600DC
Applications		Low voltage power supply circuits in switchboards and distribution boards Power supply circuits in control equipment				Protects DC power supply circuits, such as power conditioningsystems for solar power generation systems.	
Test classitication	IEC 61643-1	ClassⅠ, Ⅱ (IEC 61643-11)		ClassⅠ, Ⅱ			
Maximum continuous operating voltage (Uc)	—	AC275V	AC255V	AC460V	AC500V	DC300V	DC615V
Impulse current (Iimp)	10/350μs	25kA	75kA	25kA	75kA	25kA	
Nominal discharge current (In)	8/20μs	—	20kA				
Short-circuit withstand capability (Isccr)	—	50kA	—				
Voltage protection level (Up)	Based on IEC	2.0kV or less	1.5kV or less	2.5kV or less	1.8kV or less	1.5kV or less	2.5kV or less
Follow current shutoff rating (Ifi)	Uc=AC460V	—		50kA	—		
	Uc=DC300V	—				50kA	—
	Uc=DC610V	—					50kA
Applicable wires	—	AWG11~5(4~16㎟)	AWG10~4(5.5~22㎟)				
Deterioration display	—	Yes (Concavo: normal; Convex: deteriorating)	—	Yes (Blue : normal; Red: deteriorating)	—	Yes (Concavo: normal; Convex: deteriorating)	Yes (Blue : normal; Red: deteriorating)
Warning contact output terminal	—	Yes	—	Yes	—	Yes	
Operating environmental conditions	Rated operating temperature Rated operating humidity	-40℃ to +80℃ 96% or less (no condensation)	-40℃ to +70℃ 95% or less (no condensation)				

Smart SPD® System

IEC ClassⅡ compliant
By using Smart SPD® monitor "SMU-AC" with Smart SPD® "SMA-MZSR 200JKI" "SMA-MZSR 400JKI", Smart SPD® System can do the centralized management and the remote monitoring by LAN.

Conforming standards

- IEC 61643-11 compliant
- RoHS compliant

Features

- Maximum discharge current up to 40 kA (induction lightning waveform 8/20 μs)
- Lightning surge current measurement, Replacement recommendation display function
- Lightning surge information display function (3 phases-Small, Middle, Large with date, hours, minutes and seconds)
- Remote monitoring via LAN (for Windows PC)
- Deterioration display function (warning contact output terminal attached)
- DIN rail mountable (35 mm)

Applications

- Low voltage power supply circuits in switchboards and distribution boards (AC 100V/200V, 400V)
- Power supply circuits in control equipment (AC 100V/200V, 400V)

■Characteristics

SMA-MZSR [ ] 【Smart SPD® for systems】

Item	Measurement conditions	Performance	
		SMA-MZSR200JK1	SMA-MZSR400JK1
Maximum continuous operating voltage (50/60 Hz) (Uc)	—	AC275V	AC500V
Maximum discharge current (Imax)	8/20μs	40kA	
Nominal discharge current (In)	8/20μs	20kA	
Voltage protection level (Up)	Based on IEC	1.4kV or less	2.5kV or less

SMU-AC 【Smart SPD® monitor】

Item	Performance
Communication interface	LAN: 10BASE-T
No. of Smart SPD® connectable	50 (max.)
Power supply	AC 100V to 220V (using AC adapter)

※Smart SPD System consists of the required number of "Smart SPD for systems" and one "Smart SPD monitor" as a set. Connection cables and grounding bars are optional and sold separately.

Smart SPD® System

■External view

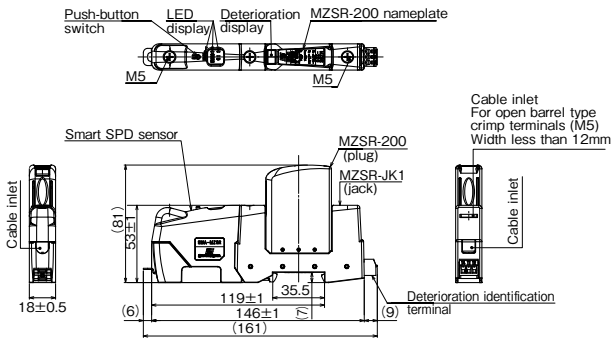

Smart SPD®for systems

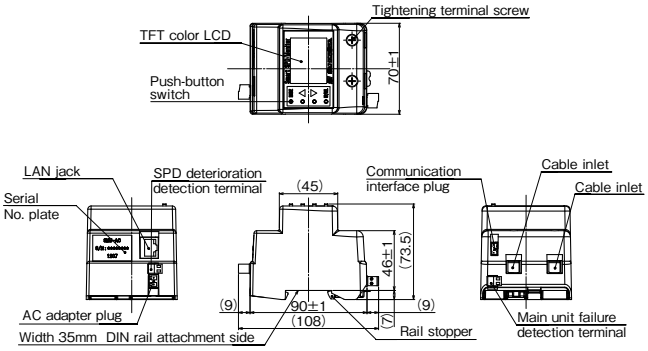

Smart SPD®monitor

■Installation examples (SMA-MZSR200+SMU-AC)

TN system (single phase)	TT system
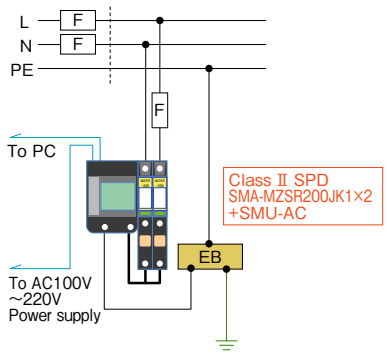	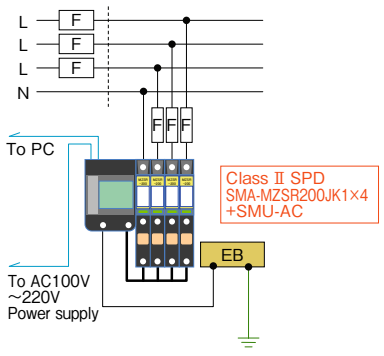

■Installation examples (SMA-MZSR400+SMU-AC)

TN-S system	TN-C system	TT system
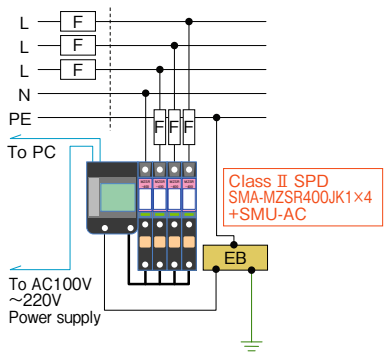	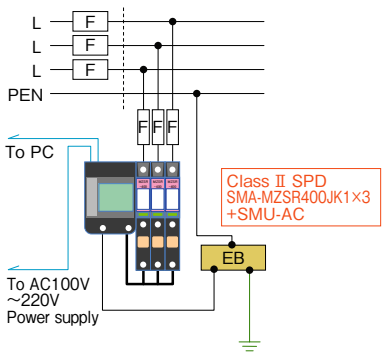	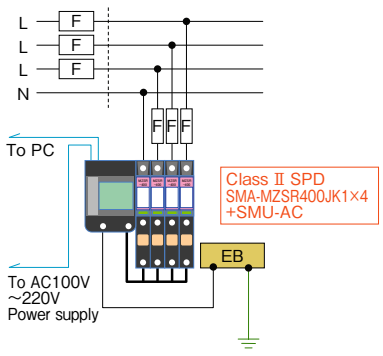

Smart SPD®
SMBP-MZSR200 series
SMBP-MZSR400 series

IEC ClassⅡ compliant

Conforming standards

- IEC 61643-11 compliant
- RoHS compliant

Features

- Maximum discharge current up to 40kA (induction lightning waveform 8/20μs)
- Lightning surge current measurement, Replacement recommendation display function
- Lightning surge current count display function
- Plug-in type
- Deterioration display function (warning contact output terminal)
- DIN rail mountable (35mm)

Applications

- Low voltage power supply circuits in switchboards and distribution boards (AC 100V/200V, 400V)
- Power supply circuits in control equipment (AC 100V/200V, 400V)

(SMBP-MZSR400JK3AR) Dimensions: W72×D99×H81 (mm)
Mass: 410 (g)

■Product type identification

SMBP – MZSR □□□ JK □□

- Maximum continuous operating voltage (Uc)
  - 200: AC275V
  - 400: AC500V
- 1～3: SPD connectivity number
- ・None: No gap
- ・AR: With gap (N-PE)

■External view

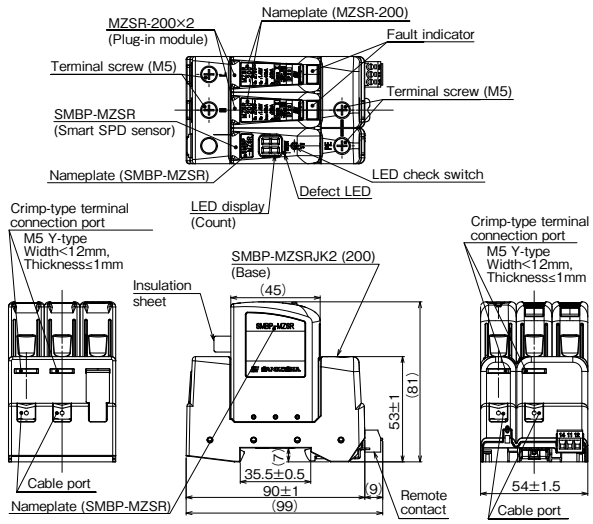

SMBP-MZSR200JK2

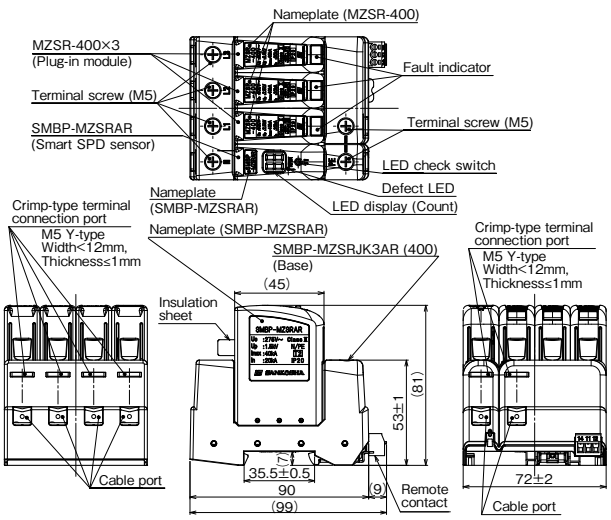

SMBP-MZSR400JK3AR

■Characteristics

Item	Measurement conditions	Performance			
		SMBP-MZSR200JK [ ]	SMBP-MZSR200JK [ ] AR	SMBP-MZSR400JK [ ]	SMBP-MZSR400JK [ ] AR
Maximum continuous operating voltage (50Hz/60Hz) (Uc)	—	AC275V		AC500V	
Maximum discharge current (Imax)	8/20μs	40kA			
Nominal discharge current (In)	8/20μs	20kA			
Voltage protection level (Up)	Based on IEC	1.4kV or less (each phase)	1.4kV or less (each phase) 1.5kV or less (N-PE)	2.5kV or less (each phase)	2.5kV or less (each phase) 1.5kV or less (N-PE)

■Installation examples (SMBP-MZSR200)

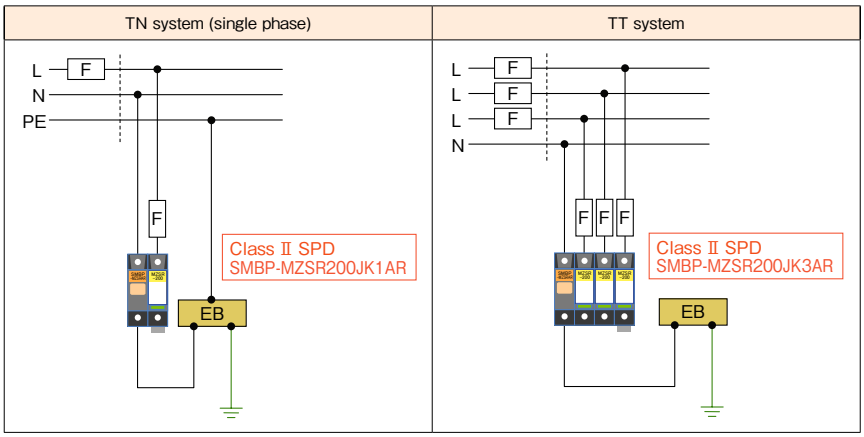

■Installation examples (SMBP-MZSR400)

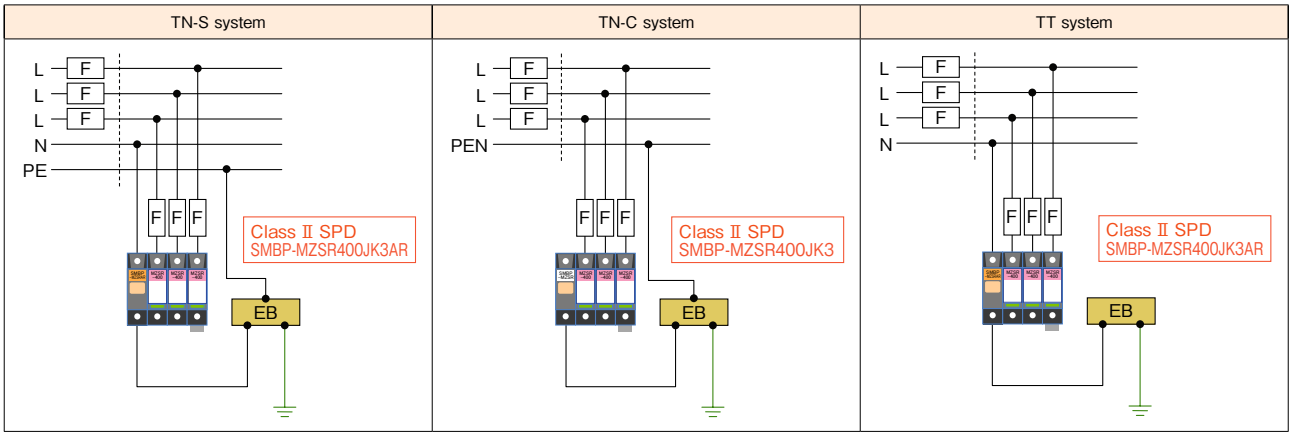

MZSR-200 series
MZSR-400 series

IEC ClassⅡ compliant

Conforming standards

- IEC 61643-11 compliant
- UL standard acquired (E328370) ※MZSR-200JK [ ]
- RoHS compliant

Features

- Maximum discharge current up to 40kA (induction lightning waveform 8/20μs)
- Plug-in type
- Deterioration display function (warning contact output terminal)
- DIN rail mountable (35mm)

Applications

- Low voltage power supply circuits in switchboards and distribution boards (AC 100V/200V, 400V)
- Power supply circuits in control equipment (AC 100V/200V, 400V)

(MZSR-400JK3ARI) Dimensions: W72×D99×H81 (mm)
Mass: 400 (g)

■Product type identification

MZSR – □□□ JK □ □

- Maximum continuous operating voltage (Uc): 200: AC275V, 400: AC500V
- 1~4: SPD connectivity number
- ・None: No gap
- ・AR: With gap (N-PE)

■External view

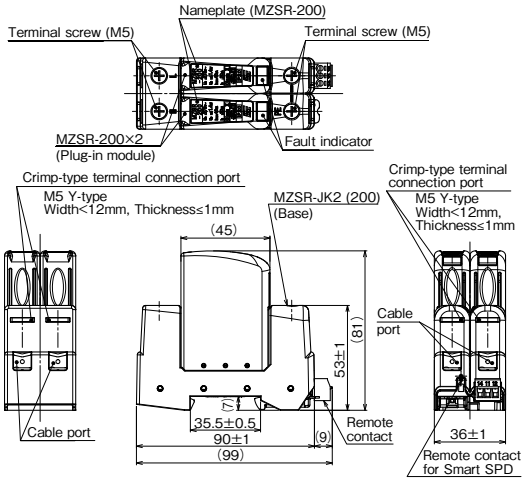

MZSR-200JK2

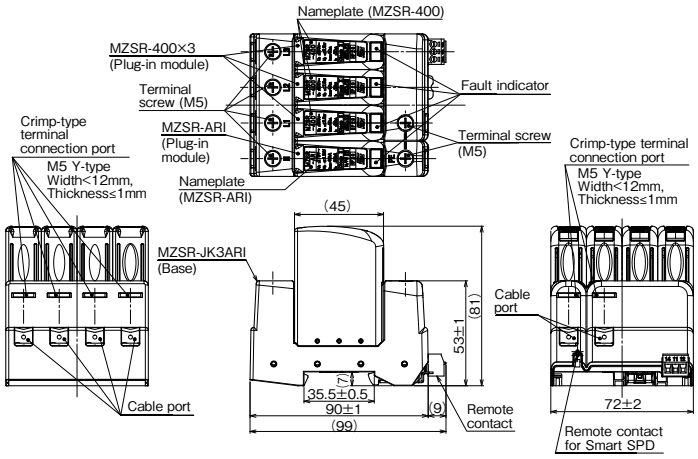

MZSR-400JK3ARI

■Characteristics

Item	Measurement conditions	Performance			
		MZSR-200JK [ ] UL	MZSR-200JK [ ] ARI	MZSR-400JK [ ]	MZSR-400JK [ ] ARI
Maximum continuous operating voltage (50/60Hz) (Uc)	—	AC275V		AC500V	
Maximum discharge current (Imax)	8/20μs	40kA			
Nominal discharge current (In)	8/20μs	20kA			
Voltage protection level (Up)	Based on IEC	1.4kV or less (each phase)	1.4kV or less (each phase) 1.5kV or less (N-PE)	2.5kV or less (each phase)	2.5kV or less (each phase) 1.5kV or less (N-PE)

■Installation examples (MZSR-200)

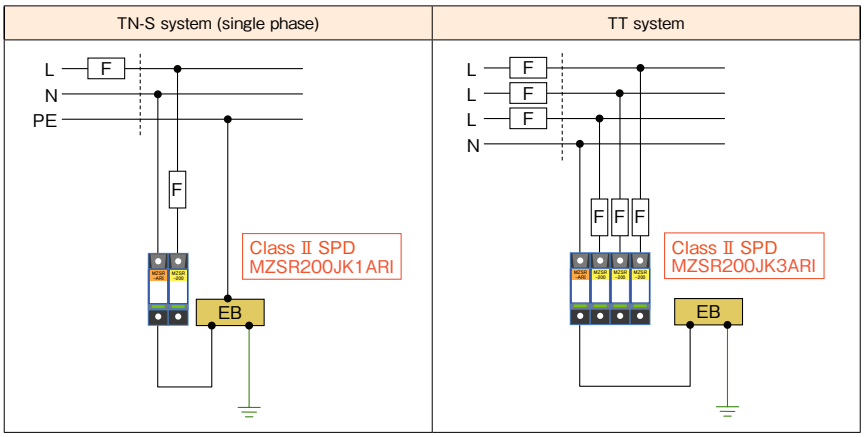

■Installation examples (MZSR-400)

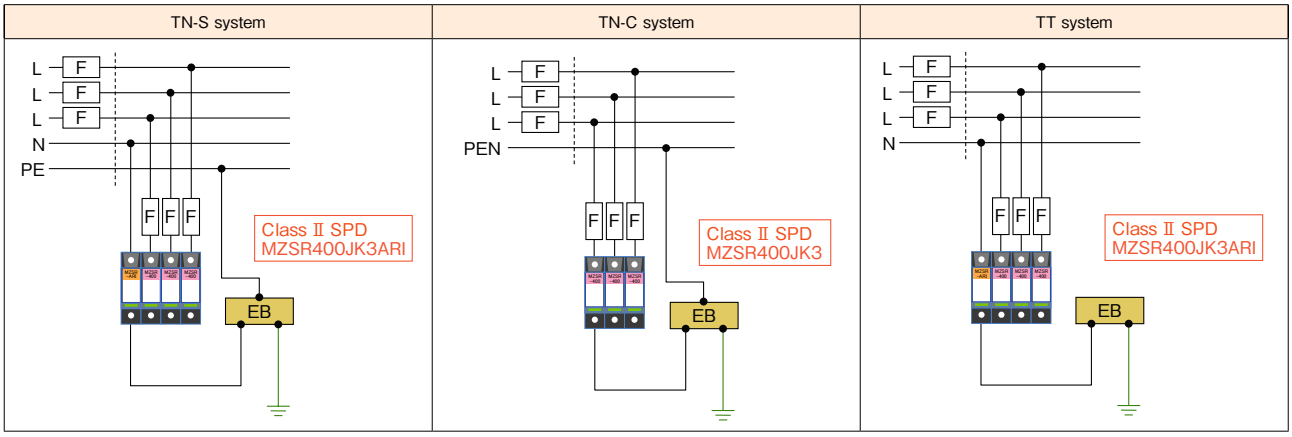

SKY-220 series
SKY-380 series

IEC Class Ⅱ compliant

Conforming standards

- IEC 61643-11 compliant
- RoHS compliant

Features

- Maximum discharge current up to 140kA (induction lightning waveform 8/20μs)
- Deterioration display function
- DIN rail mountable (35mm)

Applications

- Low voltage power supply circuits in switchboards and distribution boards (AC 100V/200V/400V)
- Power supply circuits in control equipment (AC 100V/200V/400V)

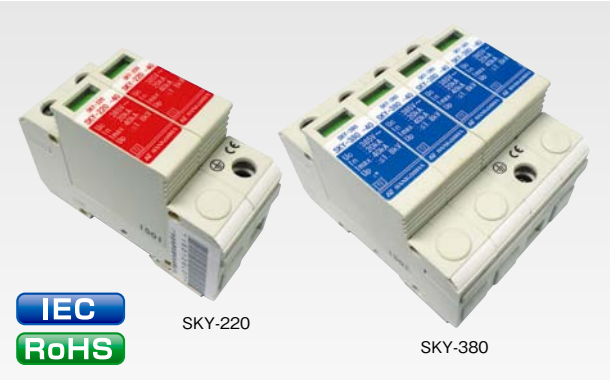

(SKY-2202-40G) Dimensions: W36×D92×H66 (mm)
Mass: 270(g)
(SKY-3804-40G) Dimensions: W72×D92×H66 (mm)
Mass: 400 (g)

■Product type identification

SKY – □□□ □ □□□ – □□ G

- Nomal voltage (Un)
- SPD connectivity number
- ·None: No gap
- ·+NPE: With gap (N-PE)
- Maximum dischage current (Imax)

■External view

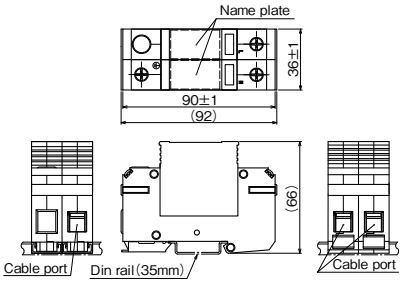

SKY-2202-20G・SKY-2202-40G

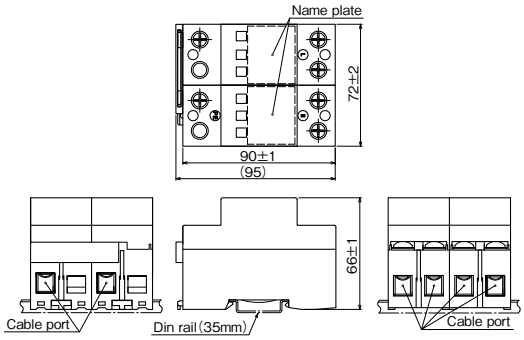

SKY-2202-80G・SKY-2202-140G

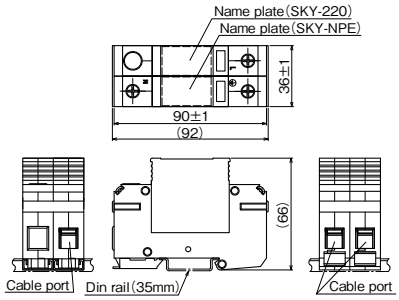

SKY-2201+NPE-40G

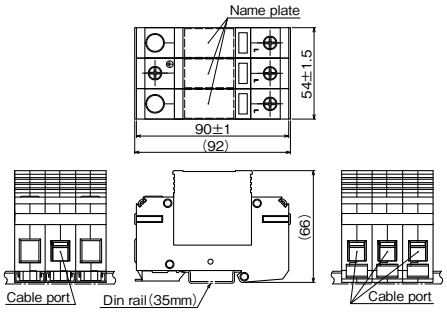

SKY-3803-40G

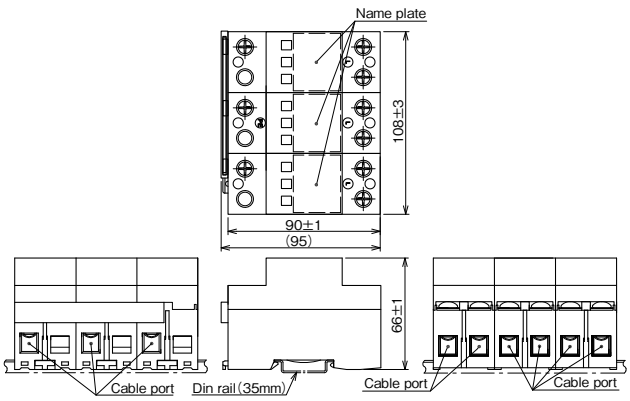

SKY-3803-80G・SKY-3803-140G

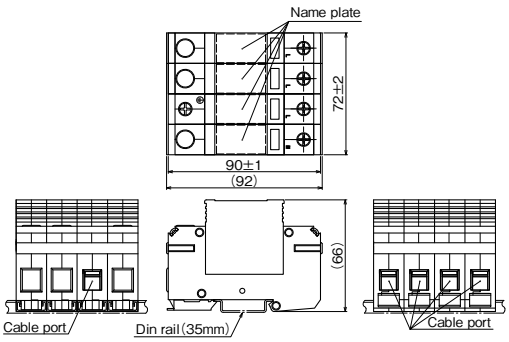

SKY-3804-40G

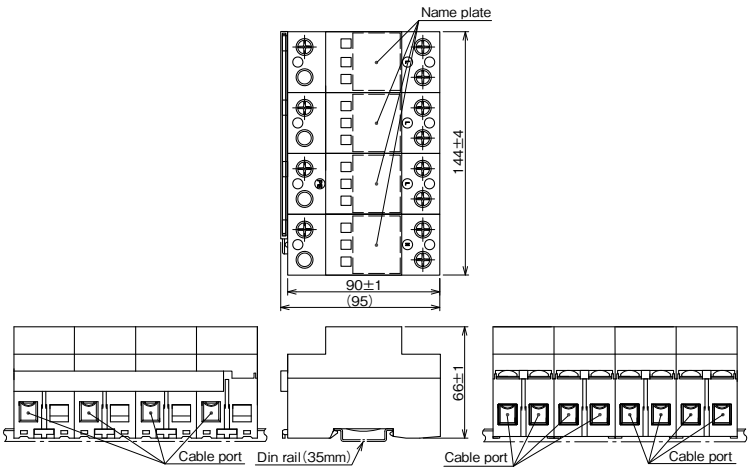

SKY-3804-80G・SKY-3804-140G

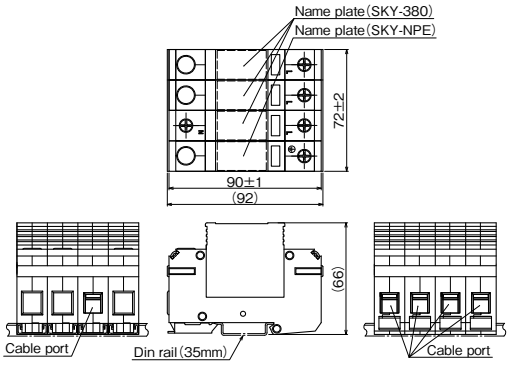

SKY-3803+NPE-40G

■Characteristics

Item	Measurement conditions	Performance											
		SKY-2202-20G	SKY-2202-40G	SKY-2202-80G	SKY-2202-140G	SKY-2201+NPE-40G	SKY-3803-40G	SKY-3803-80G	SKY-3803-140G	SKY-3804-40G	SKY-3804-80G	SKY-3804-140G	SKY-3803+NPE-40G
Maximum continuous operation voltage (Uc)	L/N-PE	385V (50Hz/60Hz)											
Maximum discharge current (Imax)	8/20μs	20kA	40kA	80kA	140kA	40kA		80kA	140kA	40kA	80kA	140kA	40kA
Nominal discharge current (In)	8/20μs	10kA	20kA	40kA	80kA	20kA		40kA	80kA	20kA	40kA	80kA	20kA
Voltage protection level (Up)	—	1.5kV or less	1.8kV or less	2.2kV or less	3.5kV or less	1.8kV or less		2.2kV or less	3.5kV or less	1.8kV or less	2.2kV or less	3.5kV or less	1.8kV or less

■Installation examples (SKY-220, SKY-380)

TN system (single phase)

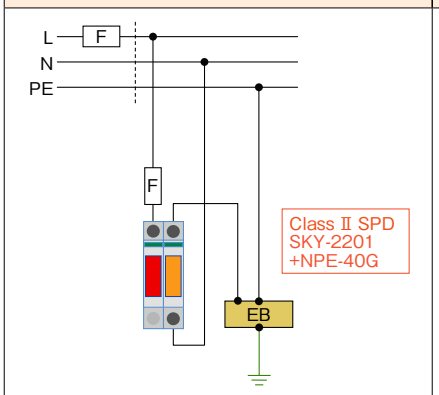

TN-S system

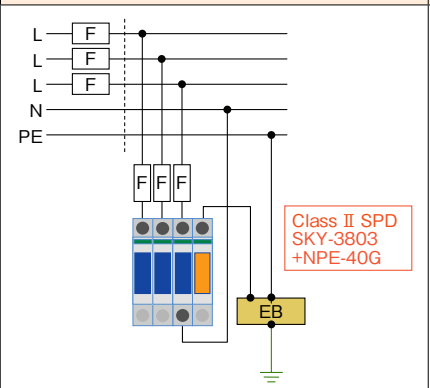

TN-C system

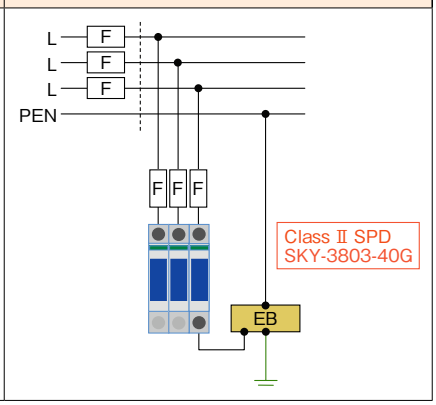

TT system

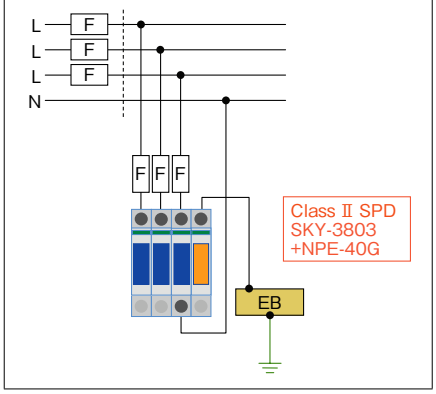

PMZ2-200
PMZ3-200

IEC ClassⅡ compliant

Dimensions: W43×D44×H48.5 (mm)
Mass: 85 (g)

Conforming standards

- IEC 61643-1 compliant
- UL standard aqcuired (E328370) ※PMZ2-200
- RoHS compliant

Features

- Space saving design to put inside devices
- A single unit can provide protection across lines and grounds
- Built-in isolation function prevents overheating in the event of device deterioration
- Features highly visible LED display for deterioration and defect

Applications

- Features built-in PCS (power conditioning system), for solar power generation, etc.
- Built-in lighting panels, etc.

■Characteristics

Item	Measurement conditions	Performance	
		PMZ2-200 UL	PMZ3-200
Applicable voltage		AC250V	
Maximum continuous operating voltage (Uc)	(inter line, to ground)	AC275V	
Maximum discharge current (Imax)	8/20μs	10 kA (single wire)	
Nominal discharge current (In)	8/20μs	5 kA (single wire)	
Voltage protection level (Up)	8/20μs, 5kA (inter line, to ground)	1.5kV or less	
Impulse life	1kA, 8/20μs	500 times	

■External view

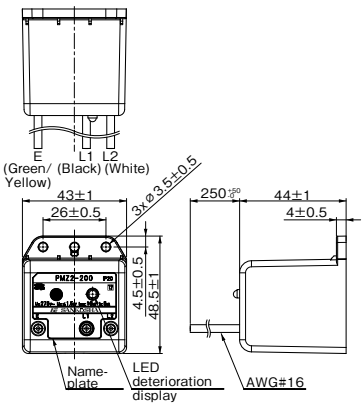

PMZ2-200

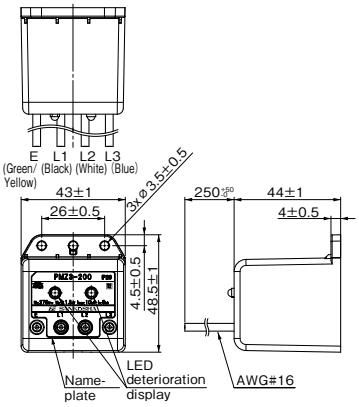

PMZ3-200

■Installation examples

TN system (single phase)

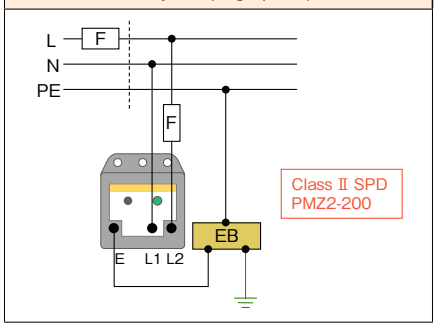

SC-K200-KPU

Conforming standards

●RoHS compliant

Features

●Space saving design to put inside devices
●A single unit can provide protection across lines and grounds

Applications

●AC DOB LED Lighting
●Built-in lightning panels etc.

Dimensions: W77×D22×H38.5 (mm)
Mass: 50 (g)

■Characteristics

Item	Measurement conditions	Performance
Maximum continuous operating voltage (Uc)	—	AC275V
Maximum discharge current (Imax)	8/20μs	10kA (single wire)
Nominal discharge current (In)	8/20μs	5kA (single wire)
Voltage protection level (Up)	8/20μs L-E	1.5kV or less
	8/20μs L-L	2.0kV or less
Impluse life	1kA, 8/20μs	500 times

■External view

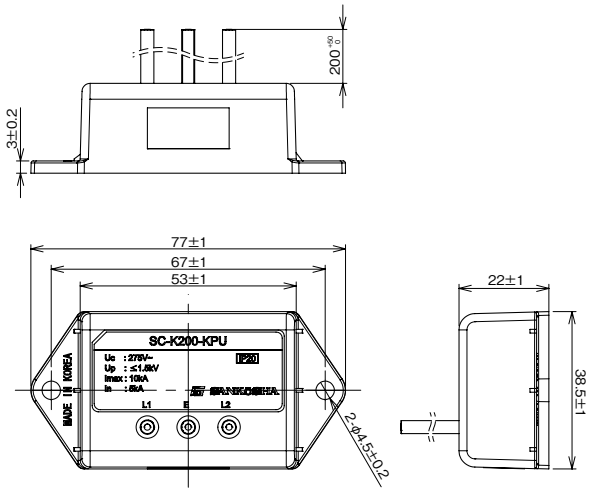

■Installation examples

TN system (single phase)

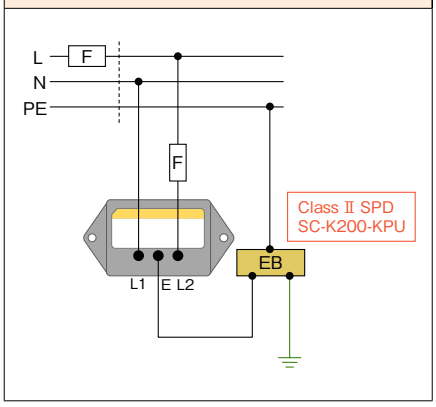

MKY23 series
MKY44 series
MKYS2 series
MKYS4 series

IEC ClassⅡ compliant

Conforming standards

- IEC 61643-1/IEC 62305-4 compliant
- RoHS compliant

Features

- 3-electrode dimensions, width 75mm (MKY23series, 44 series)
- 2-electrode dimensions, width 50mm (MKYS2series, S4series)
- A single unit provides protection across wires and to ground.
- Accommodates from single-phase two-wire up to three-phase three-wire (MKY23 series)
- Accommodates from single-phase two-wire up to three-phase four-wire (MKY44series, S2series, S4series)
- Deterioration display function (warning contact output terminal attached: S type)
- Easily installed into distribution boards
- Mountable on DIN rail, can be attached with articulated mounting plate.
- Mountable with screw (MKY23, MKY44)
- With retractable terminal covers for electric shock prevention

Applications

- Low voltage power supply circuits in switchboards and distribution boards (AC 100V/200V, 400V)

(MKY23/MKY44) Dimensions: W75×D104.2×H65 (mm)
Mass: 300 (g)
(MKYS2/MKYS4) Dimensions: W50×D104.2×H65 (mm)
Mass: 200 (g)

■Product type identification

MKY □ □ – □□ □

- Warning contacts
  - None: No contact output terminals
  - S: With contact output terminals
- Nominal discharge current (In)
  - 05:5kA
  - 20:20kA
- 3: Single-phase・single-phase three-wire・three-phase three-wire
  4: Single-phase・single-phase three-wire・three-phase three/four-wire
- Maximum continuous operating voltage (Uc)
  - 2:130V/250V AC
  - 4:510V AC

MKYS □ □

- Warning contacts
  - None: No contact output terminals
  - S: With contact output terminals
- Maximum continuous operating voltage (Uc)
  - 2:130V/250V AC
  - 4:510V AC

■Circuit diagram

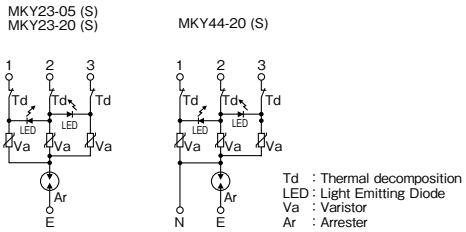

■Characteristics

Item	Measurement conditions	Performance				
		MKY23-05 MKY23-05S	MKY23-20 MKY23-20S	MKY44-20 MKY44-20S	MKYS2 MKYS2S	MKYS4 MKYS4S
Maximum continuous operating voltage (50/60Hz) (Uc)	—	Single-phase two-wire AC 130V, 250V Single-phase three-wire AC 110V/220V Three-phase three-wire AC 250V	Single-phase two-wire AC 130V, 250V Single-phase three-wire AC 110V/220V Three-phase three-wire AC 250V	Three-phase three-wire AC 510V Three-phase four-wire AC 510V	Single-phase two-wire AC 130V, 250V Single-phase three-wire AC 110V/220V Three-phase three-wire AC 250V Three-phase four-wire AC 250V	Three-phase three-wire AC 510V Three-phase four-wire AC 510V
Maximum discharge current (Imax)	8/20μs	10 kA (3 times) (inter line, to ground)	40 kA (inter line, to ground)		20kA (inter line, to ground)	
Nominal discharge current (In)	8/20μs	5 kA (inter line, to ground)	20 kA (inter line, to ground)		10 kA (inter line, to ground)	
Voltage protection level (Up)	Based on IEC	1.3 kV or less (inter line) 1.5 kV or less (to ground)	1.5 kV or less (inter line) 1.5 kV or less (to ground)	2.5 kV or less (inter line) 2.5 kV or less (to ground)	1.3 kV or less (inter line) 1.5 kV or less (to ground)	2.4kV or less (inter line) 2.4 kV or less (to ground)

■External view

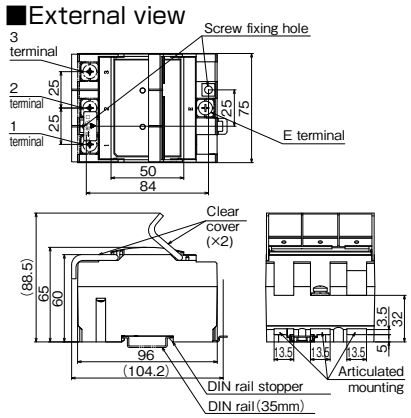

MKY23-05·MKY23-20

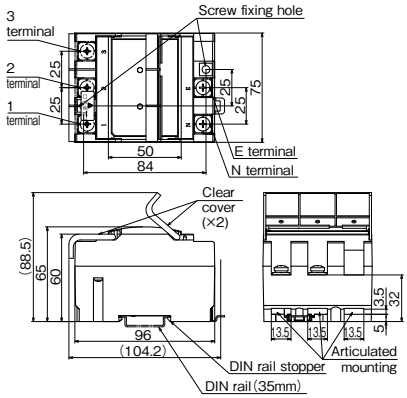

MKY44-20

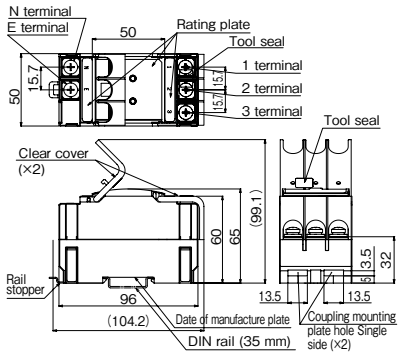

MKYS2·MKYS4

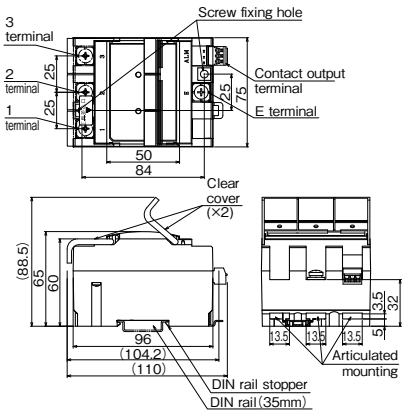

MKY23-05S·MKY23-20S

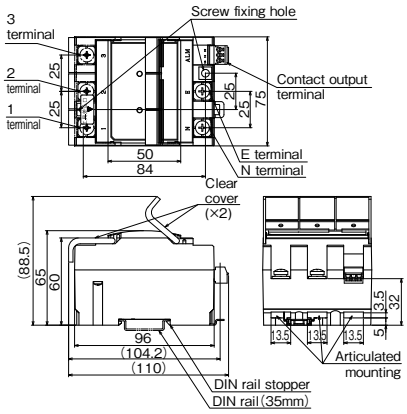

MKY44-20S

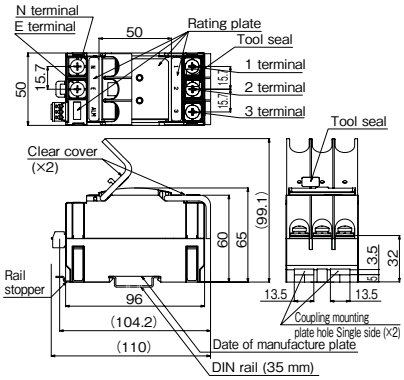

MKYS2S·MKYS4S

■Installation examples (MKY series)

TN-S system	TN-C system	TT system
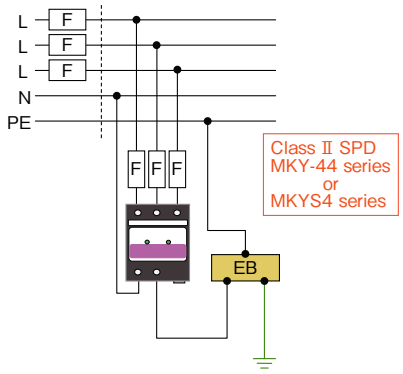	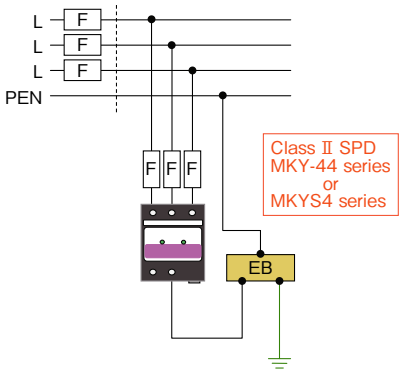	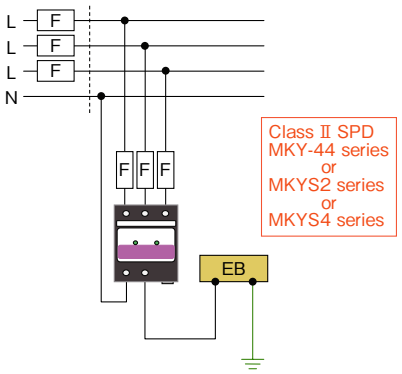

SPD for PV
MZSR-1000PVY

IEC ClassⅡ compliant

Conforming standards

- IEC 61643-1 compliant
- RoHS compliant

Features

- Maximum discharge current 40kA (induction lightning waveform 8/20μs)
- Protection for DC1,000V PV system
- Built-in interlocking DC fuse with deterioration display, separating safely while PV system accident
- Plug-in type
- Deterioration display function (warning contact output terminal)
- DIN rail mountable (35mm)

Applications

- DC power supply circuits in PV system

(MZSR-1000PVY) Dimensions: W54×D99×H81 (mm)
Mass: 360 (g)

■External view

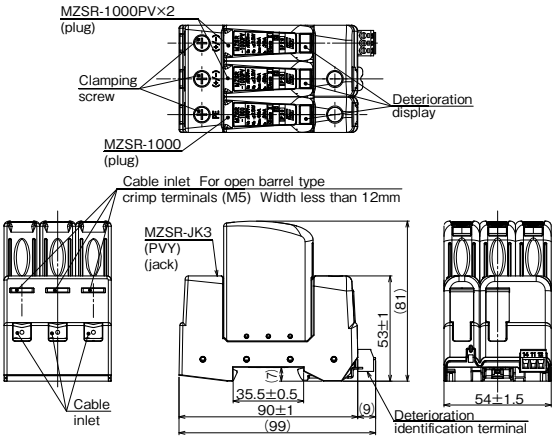

MZSR-1000PVY

■Characteristics

Item	Measurement conditions	Performance
Maximum continuous operating voltage (Uc)	—	DC1200V
Maximum discharge current (Imax)	8/20μs	40kA
Norminal discharge current (In)	8/20μs	20kA
Voltage protection level (Up)	Based on IEC	4.0kV or less
Voltage protection level (Up) (5kA)	Based on IEC	3.5kV or less

■Installation examples

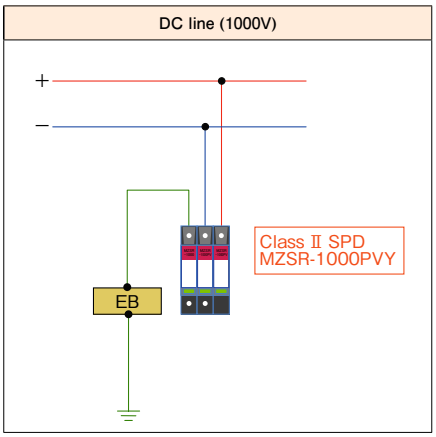

Application and Performance of Power supply SPD IEC Class Ⅱ (Type 2)

Item	Measurement conditions	Performance							
		SMA-MZSR200 SMBP-MZSR200 MZSR-200	SMBP-MZSR200 [ ] AR MZSR-200 [ ] ARI	SMA-MZSR400 SMBP-MZSR400 MZSR-400	SMBP-MZSR400 [ ] AR MZSR-400 [ ] ARI	MZSR-1000PVY	SKY-2202-20[ ]	SKY-2202-40[ ]	SKY-2202-80[ ]
Maximum continuous operating voltage (Uc)	—	AC275V		AC500V		DC1200V	385V (50Hz/60Hz)		
Maximum discharge current (Imax)	8/20μs	40kA					20kA	40kA	80kA
Nominal discharge current (In)	8/20μs	20kA					10kA	20kA	40kA
Voltage protection level (Up)	Based on IEC	1.4kV or less	1.4kA or less (each phase) 1.5kA or less (N-PE phase)	2.5kV or less	2.5kA or less (each phase) 1.5kA or less (N-PE phase)	4.0kA or less	1.5kV or less	1.8kV or less	2.2kV or less
Deterioration display	—	Yes (Green: normal; Red: deteriorating)							Yes (Red flag: deteriorating)
Warning contact output terminal	—	Yes					—		
Applicable wires	—	AWG15~4(1.6~22mm^2)					AWG15~4(1.6~25mm^2)		
Operating environmental conditions	Rated operating temperature Rated operating humidity	-25°C to +60°C 90% or less (no condensation)					-40°C to +70°C 95% or less (no condensation)		

Item	Measurement conditions	Performance							
		SKY-2202-140[ ]	SKY-2201+NPE-40[ ]	SKY-3803-40[ ]	SKY-3803-80[ ]	SKY-3803-140[ ]	SKY-3804-40[ ]	SKY-3804-80[ ]	SKY-3804-140[ ]
Maximum continuous operating voltage (Uc)	—	385V (50Hz/60Hz)							
Maximum discharge current (Imax)	8/20μs	140kA	40kA		80kA	140kA	40kA	80kA	140kA
Nominal discharge current (In)	8/20μs	80kA	20kA		40kA	80kA	20kA	40kA	80kA
Voltage protection level (Up)	Based on IEC	3.5kV or less	1.8kV or less		2.2kV or less	3.5kV or less	1.8kV or less	2.2kV or less	3.5kV or less
Deterioration display	—	Yes (Red flag: deteriorating)	Yes (Green: normal; Red: deteriorating)		Yes (Red flag: deteriorating)		Yes (Green: normal; Red: deteriorating)	Yes (Red flag: deteriorating)	
Warning contact output terminal	—	—							
Applicable wires	—	AWG15~4(1.6~25mm^2)							
Operating environmental conditions	Rated operating temperature Rated operating humidity	-40°C to +70°C 95% or less (no condensation)							

Item	Measurement conditions	Performance							
		SKY-380+NPE-40[ ]	SC-K200-KPU	PMZ2-200 PMZ3-200	MKY23-05 MKY23-05S	MKY23-20 MKY23-20S	MKY44-20 MKY44-20S	MKYS2 MKYS2S	MKYS4 MKYS4S
Maximum continuous operating voltage (Uc)	—	385V (50Hz/60Hz)	AC275V		Single-phase two-wire AC130V, 250V Single-phase three-wire AC110V/220V Three-phase three-wire AC250V		Three-phase three-wire AC510V Three-phase four-wire AC510V	Single-phase two-wire AC130V, 250V Single-phase three-wire AC110V/220V Three-phase three-wire AC250V Three-phase four-wire AC250V	Three-phase three-wire AC510V Three-phase four-wire AC510V
Maximum discharge current (Imax)	8/20μs	40kA	10kA (single wire)		10 kA (3 times)	40kA		20kA	
Nominal discharge current (In)	8/20μs	20kA	5kA (single wire)		5kA	20kA		10kA	
Voltage protection level (Up)	Based on IEC	1.8kV or less	1.5kV (8/20μs L-E) 2.0kV or less (8/20μs L-L)	5kA (L-L,L-E) 1.5kV or less	1.3 kV or less (inter line) 1.5 kV or less (to ground)	1.5 kV or less	2.5 kV or less	1.3 kV or less (inter line) 1.5 kV or less (to ground)	2.4kV or less
Deterioration display	—	Yes (Green: normal; Red: deteriorating)	—	Yes (LED ON: normal; LED OFF: deteriorating)					
Warning contact output terminal	—	—			Yes (MKY23-05S)	Yes (MKY23-20S)	Yes (MKY44-20S)	Yes (MKYS2S)	Yes (MKYS4S)
Applicable wires	—	AWG15~4 (1.6~25mm^2)	—		AWG10~6(5.5~14mm^2)				
Operating environmental conditions	Rated operating temperature Rated operating humidity	-40°C to +70°C 95% or less (no condensation)	-20°C to +70°C 90% or less (no condensation)		-20°C to +60°C 30 to 90% (no condensation)				

MZAC-200

IEC ClassⅢ compliant

Conforming standards

- IEC 61643-11 compliant
- RoHS compliant

Features

- Space saving design to put inside devices
- Open circuit voltage 6kV (1.2/50μs)
- Deterioration display function
- Built-in isolation function prevents overheating in the event of device deterioration

Applications

- Built-in devices, panels

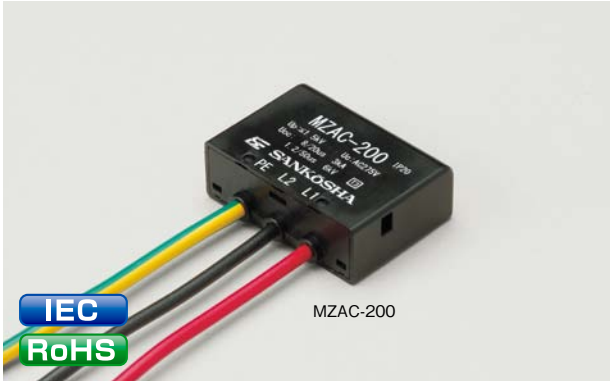

Dimensions: W35×D12×H25 (mm)
Mass: 21.8 (g)

■Characteristics

Item	Measurement conditions	Performance
Maximum continuous operating voltage (50Hz/60Hz) (Uc)	—	AC275V
Open circuit voltage	1.2/50μs	6kV
Voltage protection level (Up)	Based on IEC	1.5kV or less

■Installation examples

TN system (Single phase)

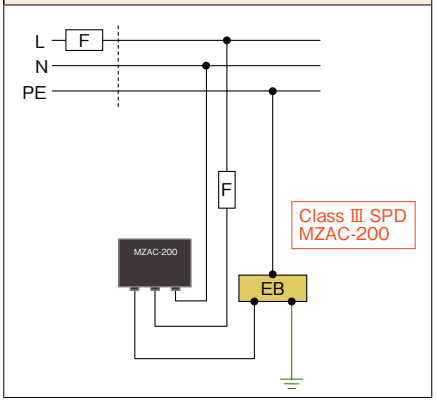

■External view

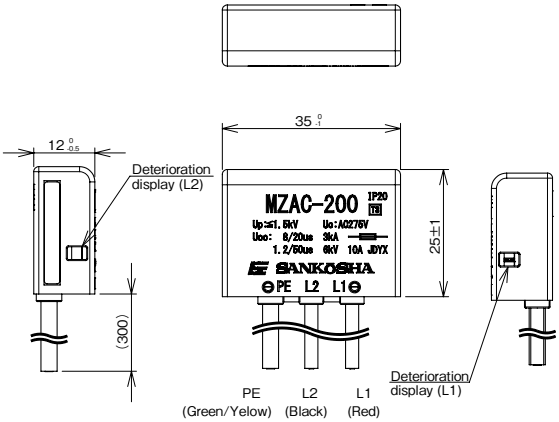

Smart SPD®
SMH-CLP series
SMU-CLP-ALMJK

IEC Category C2/D1 compliant

Conforming standards

- IEC 61643-21 compiant
- IEC Category C2/D1 compliant
- RoHS compliant

Features

- SPD deterioration desplay
- Lightning surge current measurement
- Remote monitoring with contact output
- Recognition of line type by label color
- Capable to choose driving power source (external power (DC24V) or battery)
- Capable to connect 2 crimped terminals to one wiring terminal
- Capable to conncet earth with both earthing terminal or DIN rail (35mm)
- Capable to install both DIN rail (35mm) or wooden board

Dimensions: W22×D115.5×H77.5 (mm)
Mass: 120 (g)

■External view

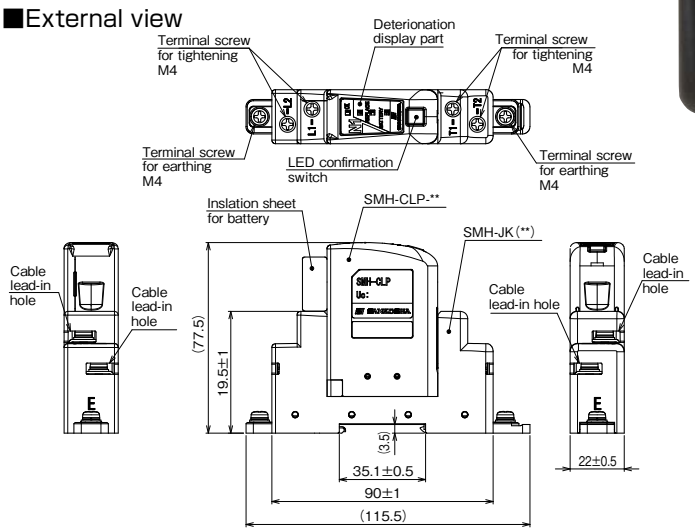

■Operation

Operation		Display	State
External power	Battery		
Alltime lighting	Press button one-time	Green	Nomal
		Yellow	Replacement recommendation
		Red	Replacement
Press button twice		Blink	Surge operation count number red: Hundreds digit Yellow: Tens digit Green: Ones digit

■Connection plug (Accessory)

Need to use connection plug to each jack when installing contact monitoring unit.

■Applications/Characteristics

Item		Characteristics						
		SMU-CLP-ALMJK	SMH-CLP-N1	SMH-CLP-NM	SMH-CLP-K2	SMH-CLP-H3 [ ]	SMH-CLP-EN	SMH-CLP-DC
Application		Contact output, external power input	Balanced circuit, wind speed meter, pyranometer, rain gauge, hygrometer	Multi-core measurement line, disaster prevention monitoring board (multi-care), wind speed meter, platinum thermometer	AC/DC 110V control circuit, relay circuit, speaker line	Instrumentation line, potentiometer, slow pulse, DC4-20mA, RS232C, RS422, RS485	Telephone line, ADSL	DC24V, DC48V power supply
Maximum continuous operating voltage (Uc)		—	DC52V		DC180V, AC140V	H3 6V:DC9V H3 12V:DC13.5V H3 24V:DC27V H3 48V:DC52V	DC180V	DC52V
Rated current		—	DC3A	—	DC3A	DC100mA		DC3A
Insulation resistance		—	1MΩ or more		100MΩ or more	1MΩ or more		—
Series resistance		—	100mΩ or less	—	100mΩ or less	5Ω±10%	12Ω or less	100mΩ or less
Insertion loss		—	1.0dB or less (DC~5MHz)		1.0dB or less (DC~10MHz)	H3 6V:1dB or less (DC~500kHz) H3 12V, H3 24V, H3 48V:1dB or less (DC~1MHz)	1.0dB or less (DC~10MHz)	1.0dB or less (DC~500kHz)
Voltage protection level (Up) (1.2/50μs, 10kV)		—	500V or less		800V or less	H3 6V:80V or less H3 12V:100V or less H3 24V:120V or less H3 48V:140V or less	400V or less	500V or less
Impluse durability	Category C2 (8/20μs)	—	10kA (10 times)					
	Category D1 (10/350μs)	—	1kA (2 times)			2.5kA (2 times)		1.8kA (2 times)

ZP series

IEC Category C2/D1 compliant

Conforming standards

- IEC 61643-21 compliant
- RoHS compliant

Features

- Slim design enables space saving
- Plug-in type (circuit not broken by inserting or removing plug)
- DIN rail mountable (35 mm)
- Special tester (ZPT1 type) can be used to detect deterioration.
- Round type crimped terminal for M4 (N type)

Dimensions: W12×D107×H77 (mm)
Mass: 70 (g)

Special tester for deterioration detection
ZPT1 series (Batteries sold separately)

■External view

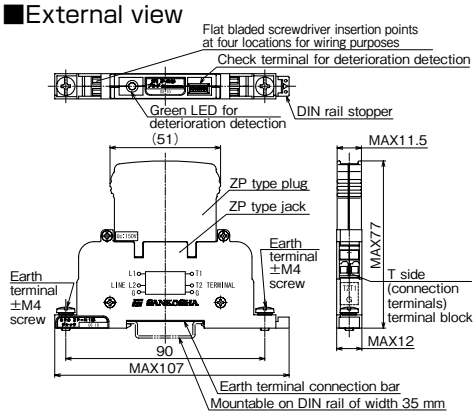

ZP-[ ] type

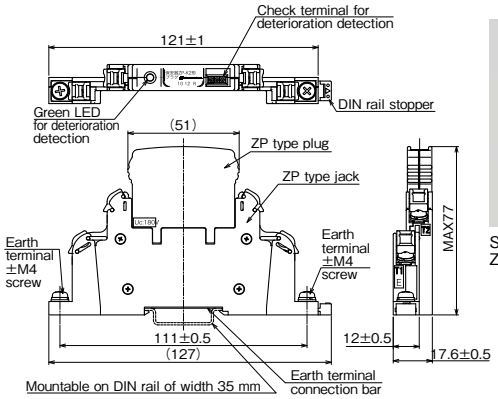

ZP-[ ]N type

■Applications/Characteristics

Item		Performance				
		ZP-A1	ZP-DC24	ZP-DC48	ZP-H2-H1	ZP-N1 ZP-N1JKN
Applications		Telephone line, ISDN line, ADSL line, xDSL line	DC 24V signal line, control circuit	DC 48V signal line, control circuit	RS422, RS485	Balanced circuit, wind speed meter, pyranometer, rain gauge, hygrometer
Maximum continuous operating voltage (Uc)		DC170V	DC27V	DC52V	DC5V	DC150V
Rated current		DC100mA	DC3A		DC100mA	DC3A
Series resistance		10Ω or less	—		5Ω±10%	—
Voltage protection level (Up)		1.0 kV or less	500V or less		50V or less	1.0 kV or less (to ground) 50V or less (inter line) * In case of balanced circuit
Impulse durability (two lines together)	Category C2 (8/20 μs)	10 kA (10 times)	4kA (10 times)		10kA (10 times)	4kA (10 times)
	Category D1 (10/350 μs)	2.5 kA (2 times)	1kA (2 times)		5kA (2 times)	1kA (2 times)
Operating environmental conditions	Rated operating temperature Rated operating humidity	-40°C to +70°C 96% or less (no condensation)				
Wiring method		Relay wiring (○), Suspended wiring (×)	Relay wiring (○), Suspended wiring (○)		Relay wiring (○), Suspended wiring (×)	Relay wiring (○), Suspended wiring (○)

Item		Performance				
		ZP-NM ZP-NMJKN	ZP-EN-1 ZP-EN1JKN	ZP-EN3 ZP-EN3JKN	ZP-K2 ZP-K2JKN	ZP-H3(06,12,24,48V) ZP-H3 24V JKN
Applications		Multi-core measurement line, disaster prevention monitoring board (multi-core), wind speed meter, platinum thermometer	Telephone line, ADSL, EPBX, xDSL	ISDN, xDSL, digital leased line	AC/DC 110V control circuit, relay circuit, speaker line	Instrumentation line, potentiometer, slow pulse, DC 4-20mA, RS232C, RS422, RS485
Maximum continuous operating voltage (Uc)		DC150V	DC170V	DC52V	DC180V AC140V	DC9V(06V), DC13.5V(12V) DC27V(24V), DC52V(48V)
Rated current		—	DC100mA		DC3A	DC400mA(06V), DC100mA(12, 24, 48V)
Series resistance		—	10Ω or less		—	5Ω±10%
Voltage protection level (Up)		1.0 kV or less (to ground) 50V or less (inter line)	400V or less	200V or less	800V or less	80V or less (06V), 100V or less (12V), 120V or less (24V), 140V or less (48V)
Impulse durability (two lines together)	Category C2 (8/20 μs)	4kA (10 times)	10kA (10 times)		4kA (10 times)	10kA (10 times)
	Category D1 (10/350 μs)	1kA (2 times)	2.5kA (2 times)		1kA (2 times)	5kA (2 times)
Operating environmental conditions	Rated operating temperature Rated operating humidity	40°C to +70°C 96% or less (no condensation)				
Wiring method		Relay wiring (×), Suspended wiring (○)	Relay wiring (○), Suspended wiring (×)		Relay wiring (○), Suspended wiring (○)	Relay wiring (○), Suspended wiring (×)

* Applicable wires: 0.08 to 2.5 mm²

CLP series

IEC Category C2/D1 compliant

Conforming standards

- IEC 61643-21 compliant
- RoHS compliant
- CRCC approved (TB/T2311-2008,TB/T3074-2003) (CLP-H3b,c,d)

Features

- High withstand capacity suitable for multiple lightning zones
- Plug-in type
- DIN rail mountable (35 mm)
- Certified explosion-proof products available
- Round type crimped terminal for M3 (width less than 6.6 mm) (N type)

Dimensions: W18×D104×H68 (mm)
Mass: 100 (g)

External view

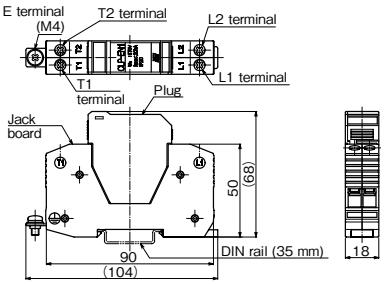

Applications/Main performance characteristics

Item		CLP-EN1JK CLP-EN1JKN	CLP-EN3JK CLP-EN3JKN	CLP-K2JK CLP-K2JKN	CLP-K3JK	CLP-VA65JK CLP-VA65JKN	CLP-N1JK CLP-N1JKN	CLP-NMJK CLP-NMJKN	CLP-H3[] JK : a-d CLP-H3[] JKN : a-d
Applications		ADSL line, telephone line, EPBX, telemetry line	ISDN line, leased line, digital leased line	AC/DC 110V control circuit	Remote monitoring equipment	DC 12/24/48V power supply, remote monitoring equipment	Disaster prevention monitoring board, balanced circuit, teleconference, pyranometer, rain gauge, hygrometer	Multi-core measurement line, disaster prevention monitoring board (multi-core), wind speed meter, platinum thermometer	Fire alarm, wind speed meter, potentiometer, slow pulse
Maximum continuous operating voltage (Uc)		DC170V	DC52V	DC180V	DC250V	DC65V	DC52V	DC170V	a:DC9V b:DC13.5V c:DC27V d:DC52V
Rated current		DC100mA		DC3A		DC1A	DC3A		DC100mA
Series resistance		5Ω±10%		—					5Ω±10% (100mA)
Voltage protection level (Up)		400V or less	200V or less	1.3kV or less		330V or less	900V or less	1.0kV or less (L-E) 50V or less (L-L)	a: 40V or less b: 45V or less c: 60V or less d: 90V or less
Impulse durability	Category C2 (8/20μs)	10kA (10 times)		4kA (10 times)		10kA (10 times)			
	Category D1 (10/350μs)	5kA (2 times)		2kA (2 times)	1kA (2 times)		5kA (2 times)		
Operating environmental conditions	Rated operating temperature Rated operating humidity	-40°C to +70°C 96% or less (no condensation)							
Wiring method		Relay wiring (○), Suspended wiring (×)		Relay wiring (○), Suspended wiring (○)				Relay wiring (×), Suspended wiring (○)	Relay wiring (○), Suspended wiring (×)

Applicable wires: 0.3 to 5.5 mm²

Wiring method for SPD for communication and signal lines (1)

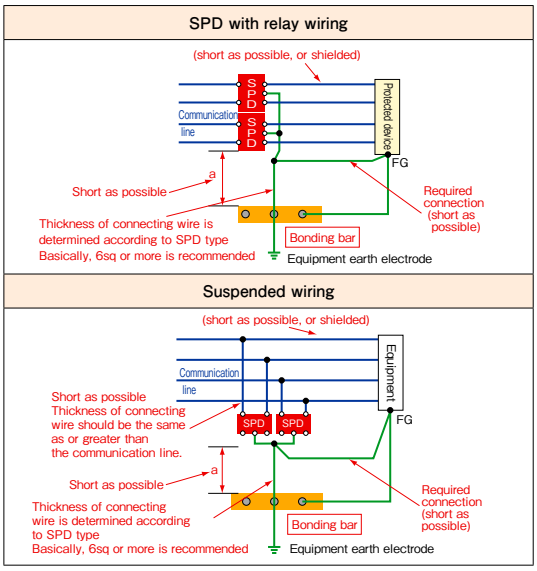

Wiring method for SPD for communication and signal lines (2)

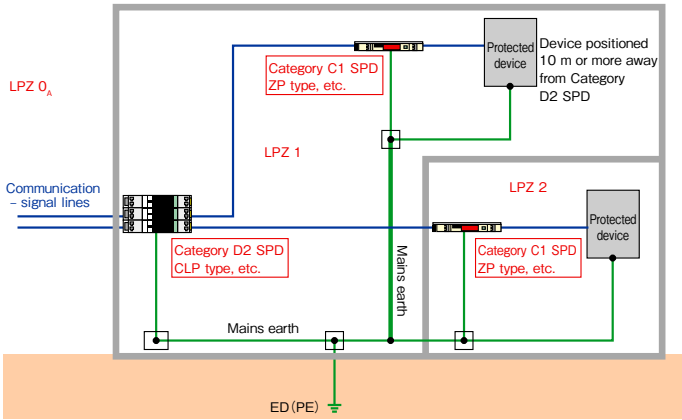

Ideally, SPD should be installed at zone boundaries after LPZ design has been carried out.
If the distance between the SPD installation point and the protected device is 10 m or more, the installation of extra SPD would be an ideal solution.
For induced lightning countermeasures, SPD should be installed close to the protected device.

Smart SPD®
SMB-KRAPS1

SPD for Krone LSA-plus terminal
IEC Category C2/D1 compliant

Conforming standards

- IEC 61643-21 compliant
- RoHS compliant

Features

- Use for Krone LSA-PLUS terminal
- Replacement recommendation display function
- Lightning surge count display function

Applications

- Communication line (MDF/IDF)

Mass: 18 (g)

■External view

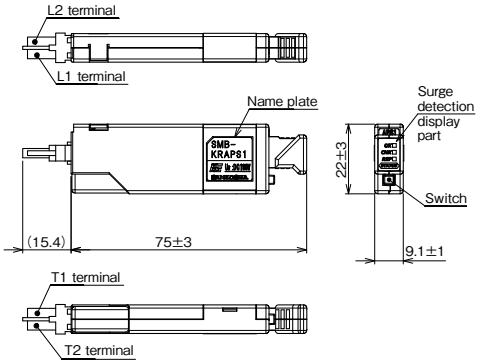

■Operation

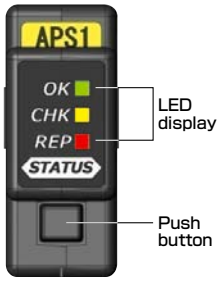

Operation	display	State
Press button onetime	Green	Normal
	Yellow	Replacement is recommended in multi lightning area.
	Red	Replacement is recommended.
	All	Deterioration. Replacement.
Press button twice	Blink	Surge count number (Red: Hundreds digit, Yellow: Tens digit, Green: Ones digit)

■Specification

Electrical characteristic

Item		Performance
Application		ADSL、TEL、ISDN
Maximum continuous operating voltage (Uc)		DC180V
Rated current		DC100mA
Series resistance/wire		10Ω or less
Insertion loss		DC~5MHz 1.0dB or less
Voltage protection level (Up)		500V or less (1.2/50μs·10kV)
Impulse durability*	Category C2 (8/20μs)	10kA (10 times)
	Category D1 (10/350μs)	2.5kA (2 times)
Deterioration display		Yes

*Impulse durability : Category C2 is 2 line total value.
Category D1 is 1 line value.

Surge detection part's performance

Item	Specification	Remarks
Minimum surge detection sended current	±20A or more	8/20μs
Maximum surge permissible current	±10kA (one line ± 5kAx2)	8/20μs
Display	Green LED Yellow LED Red LED	・Replacement recommendation level display ・SPD deterioration display ・Count number display ・Battery replacement display
Operation	Button switch	・Onetime/twice pressing
Power supply	Button battery (CR1220) Battery lifetime more than 5 years*	Able to replace battery

*Can be changed by operating condition and operation.

KR-APS1

SPD for KRONE terminal
IEC Category C2/D1 compliant

Conforming standards

- IEC 61643-21compliant
- RoHS compliant

Features

- Specially for use with the excellent operability LSA-PLUS (KRONE terminal)
- MDF/IDF can be manufactured with a combination of SPD and LSA-PLUS

Dimensions: W9.1×D22.2×H74.5(59) (mm)
* Dimensions in parentheses ( ) represent height when mounted on Krone module
Mass: 10 (g)

■Applications/Main performance characteristics

Item		Performance
Applications		ADSL, TEL, ISDN
Maximum continuous operating voltage		DC180V
Rated current		DC100mA
Series resistance/line		10Ω
Insertion loss		DC to 5 MHz, 1.0dB or less
Voltage protection level (Up)		500V or less (1.2/50 μs, 10kV)
Impulse durability	Category C2 (8/20 μs)	10kA (10 times)
	Category D1 (10/350 μs)	2.5kA (2 times)
Deterioration display		Yes (Pink: normal; Purple: deteriorating)

Note: APS1 are also available without the deterioration display function.

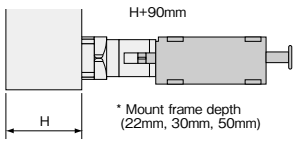

■SPD installation diagram

[When using mount frame]

① Mount frame
② LSA-PLUS switching terminal
③ Earth bar
④ SPD

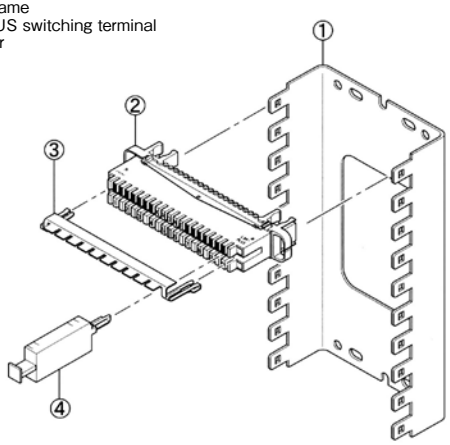

[When using profile frame]

① Profile set
② Earth clip
③ LSA-PLUS switching terminal
④ Earth bar
⑤SPD

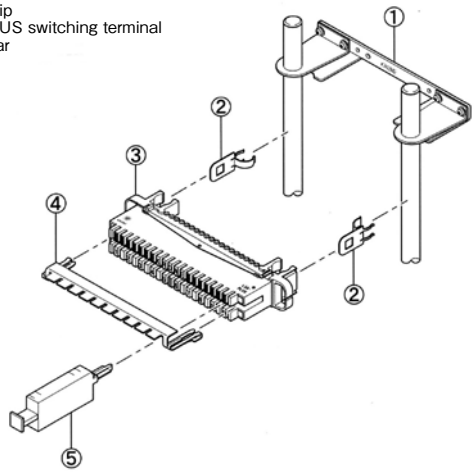

HOWL2
SMB-P・R series

IEC Category C2/D1 compliant

Conforming standards

- IEC 61643-21 compliant
- IEC category C2/D1 compliant
- RoHS compliant

Features

- Applicant up to 10 core wiring
- LED deterioration display function
- Replacement recommendation display function
- Lightning surge count display function
- DIN rail (35mm) mounting
- Design registered product

Applications

- Automatic fire alarm equipment
- Multi line

Dimensions: W100×D31×H100(mm)
Mass: about 200(g)

■External view

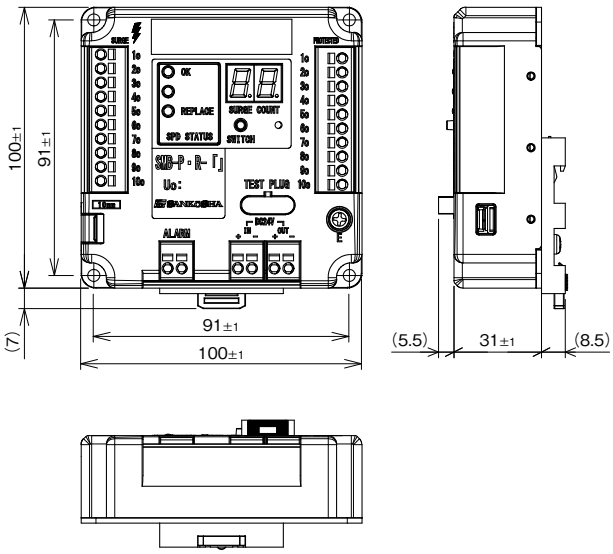

■Part name

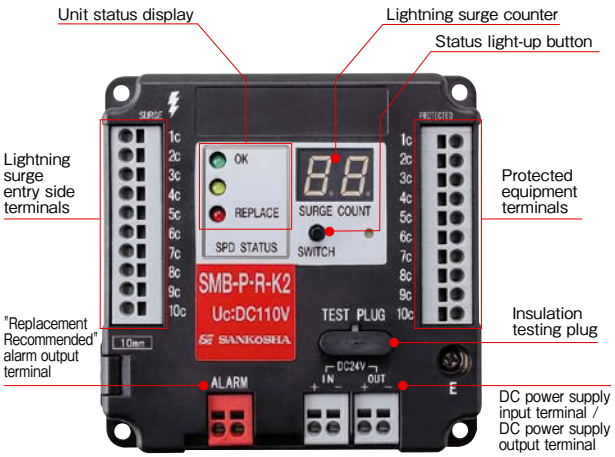

■Applications/Characteristics

Item		Characteristics					
		SMB-P・R-NM	SMB-P・R-NM (H)	SMB-P・R-K2	SMB-P・R-H3	SMB-P・R-485	
Application		Alarm transfer line, sensor line	Alarm transfer line, sensor line, high durability type for impluse current	Bell + Display light	Instrumentation line (DC4-20mA etc.)	RS485 + Maintainance telephone	
Maximum continuous operating voltage (Uc)		DC48V	DC48V	DC110V	27V	RS485	Maintainance telephone
						DC15V	DC48V
Rated current		1A		3A	100mA		1A
Series resistance		1Ω or less			4Ω~6Ω		1Ω or less
Impluse current durability	8/20μs	5kA	10kA	5kA			
	10/350μs	2.5kA					
Voltage protection level (Up)	1.2/50μs, 10kV	500V or less	500V or less	1kV or less	150V or less	100V or less	500V or less
Connection core		10 cores				8 cores	2 cores

■Examples of SPD installations

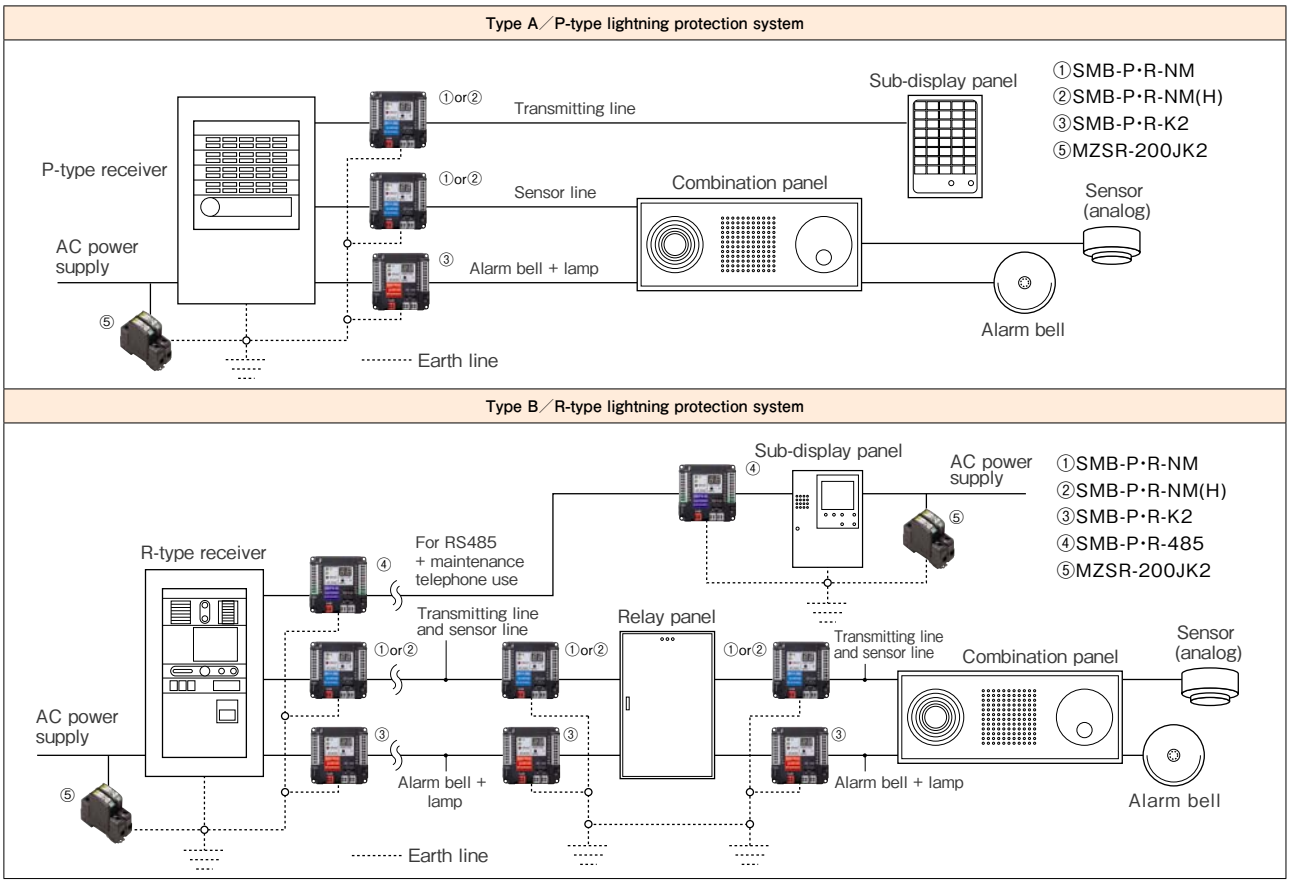

■Innovative status display

LEDs make the SPD status easier to read. "Replacement Recommended" function helps you make a replacement before a malfunction occurs.

〈LED display〉
Green: OK

Yellow: Replacement recommended

Red: Replace

When replacement is recommended, the alarm terminal outputs an alarm signal.

■Visualization of lightning surges

When a lightning surge comes in, a 7-segment display shows the number of times the unit has operated.

■Light-emitting system

Uses two systems: button battery or DC power supply input. The LED-lamp status display and the 7-segment display in the surge counter light up.
If the unit is only powered by a button battery, the status display will light up for several seconds when you press the "SWITCH" status light-up button.

When running on a DC power supply input, the status display will be lit all the time. In addition, if you are using multiple HOWL2 units, you can wire them in parallel to a DC power supply. (Power consumption approx. 80 mA per unit)

■Additional functions for use in insulation testing

Please remove the TEST PLUG from the front of the HOWL2 before you test the insulation of fire alarm systems. This will suppress SPD electrical discharges and meet the specified values during the tests.

* Be sure to put the TEST PLUG back in its original place after finishing insulation testing. To prevent you from forgetting to put the test plug back, an alarm will sound when the HOWL2 is operated without its plug in place.

■Multiple cores

Even though the HOWL2 is small and compact, its cable can have 10 core wires.

* Must be installed by a qualified person.

■Flexibility in mounting

Even though the HOWL2 is small and compact, its cable can have 10 core wires.

* The special adapter attaches to the HOWL2.

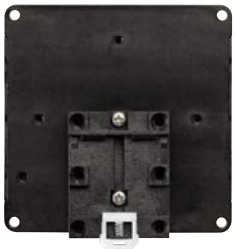

LAN-CAT5e-P+Ⅱ (Discharge type)

IEC category C2/D1 compliant

Conforming standards

- IEC 61643-21 compliant
- UL standard aquired (E140906)
- RoHS compliant

Features

- Discharge type circuits
- Gigabit Ethernet 1000Base-T enabled
- PoE Plus (IEEE802.3at) enabled
- DIN rail mountable (35mm)
- Mountable on conductive DIN rail for batch earthing

Applications

- Gigabit Ethernet
- Network cameras
- Wireless LAN access points
- VoIP enabled telephones and servers
- Outdoor installed network devices

■Characteristics

Item		Performance
Applicable lines	IEEE802.3	10BASE-T
	IEEE802.3u	100BASE-TX
	IEEE802.3ab	1000BASE-T
	IEEE802.3af	PoE
	IEEE802.3at	PoE Plus
Transmission loss		1.0dB or less
Maximum continuous operating voltage (Uc)	Between PoE terminals	DC60V
	Between each line and earth terminal	DC60V
Voltage protection level (Up)	Between each line and earth terminal (1.2/50μs, 10kV)	500V or less
Impulse durability (Total of 8 cores)	Category C2 (8/20μs)	5kA (10 times)
	Category D1 (10/350μs)	2.5kA (2 times)

LAN-CAT5e-P+Ⅱ

Dimensions: W22×D89×H35 (mm)
Mass: 55 (g)

■External view

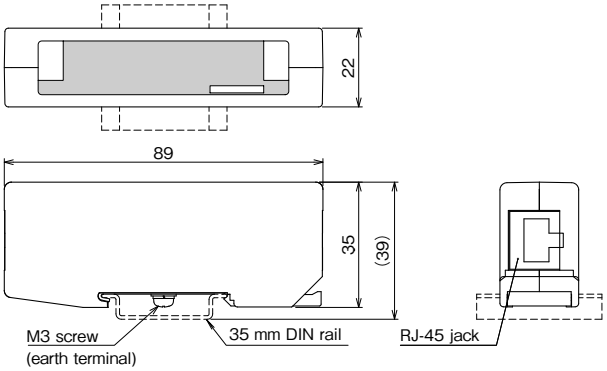

LAN-CAT6-IS (Isolation type)

Conforming standards

- RoHS compliant

Features

- Uses isolation type circuits
- 10 Gbase-T enabled (up to cat.6)
- Earth-free type not requiring earthing or protecting equipment without earthing connections
- Impluse withstand voltage 5kV or more
- DIN rail mountable (35mm)

Applications

- Gigabit Ethernet
- Networks cameras
- Ordinary households (PCs, network devices)
- Outdoors installed network devices

■Characteristics

Item		Performance
Applicable lines	IEEE802.3	10BASE-T
	IEEE802.3u	100BASE-TX
	IEEE802.3ab	1000BASE-T
	IEEE802.3an※	10GBASE-T
Transmission loss		2dB or less (each line)
AC withstand voltage (1 minute, Cutoff current 1mA)		2.0kV or more (between primary and secondary line)
Impluse withstand voltage	1.2/50μs	5.0kV or more (between primary and secondary line)

※ Applicable up to Cat.6. and no applicable for Cat.6A

LAN-CAT6-IS

Dimensions: W22×D89×H35 (mm)
Mass: about 45 (g)

■External view

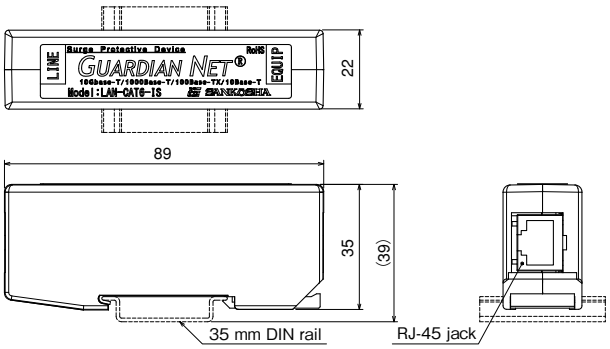

SPD for LAN

SIT (Surge Isolation Transformer) LAN-1000IS-2 (Isolation type)

Conforming standards

- IEC 61643-351 compliant
- RoHS compliant

Features

- Uses isolation type circuits
- Gigabit Erthernet 1000BASE-T enabled
- Earth-free type not requiring earthing construction work or protecting equipment without earthing connectors
- Impluse withstand voltage 15kV or more
- DIN rail mountable (35mm)

Applications

- Gigabit Ethernet
- Network cameras
- Ordinary households (PCs, network devices)
- Outdoors installed network devices

■Characteristics

Item	Measurement conditions	Performance
Applicable lines	IEEE802.3	10BASE-T
	IEEE802.3u	100BASE-TX
	IEEE802.3ab	1000BASE-T
Transmission loss		2dB or less
AC withstand voltage		4kV or more
Impluse withstand voltage	1.2/50μs	15kV or more

Dimensions: W22×D89×H35 (mm)
Mass: 55 (g)

■External view

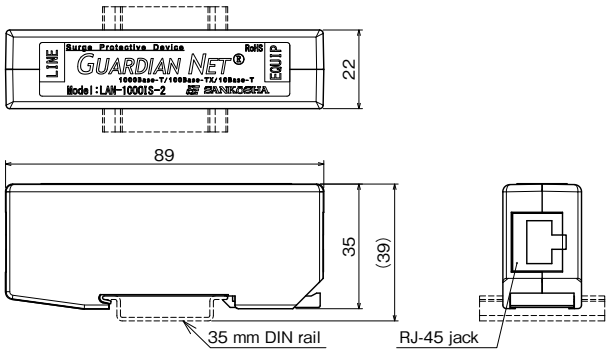

SIT (Surge Isolation Transformer) L-13KIS-1G (Isolation type)

Conforming standards

- IEC 61643-351 compliant
- RoHS compliant

Features

- Uses isolation type circuits
- Gigabit Erthernet 1000BASE-T enabled
- Earth-free type not requiring earthing construction work or protecting equipment without earthing connectors
- Impluse withstand voltage 13kV or more

Applications

- Gigabit Ethernet
- Ordinary households (PCs, network devices)

■Characteristics

Item	Measurement conditions	Performance
Applicable lines	IEEE802.3	10BASE-T
	IEEE802.3u	100BASE-TX
	IEEE802.3ab	1000BASE-T
Transmission loss		3.0dB or less
AC withstand voltage		4kV or more
Impluse withstand voltage	10/700μs	13kV or more
	1.2/50μs	10kV or more

Dimensions: W39×D53.5×H22 (mm) (Without LAN cable)
Mass: about 40 (g)

■External view

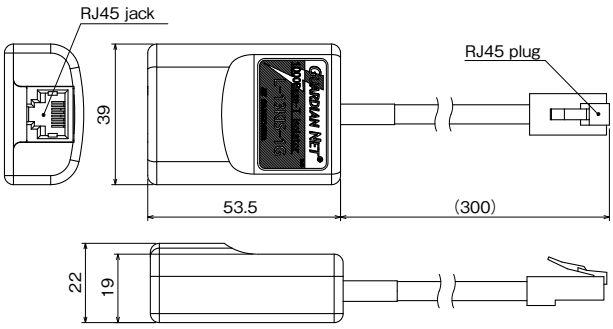

Application and Performance of SPD for LAN

Item		Applications and Performance			
		Discharge type	Isolation type		
		LAN-CAT5e-P+Ⅱ IEC UL	LAN-CAT6-IS	LAN-1000IS-2 IEC	L-13KIS-1G IEC
Applications		PoE System Gigabit Ethernet Network Camera The Wireless Access Point Telephone Equipment Applicable to VoIP Networking Equipment in the Outside Building	Gigabit Ethernet Network Camera Standard Home Network Device such as PC Networking Equipment in the Outside Building		Gigabit Ethernet Standard Home Network Device such as PC
Applicable lines	100BASE-TX	○	○	○	○
	1000BASE-T	○	○	○	○
	10GBASE-T	—	○※1	—	
Frequency band		DC to 100MHz	1M to 250MHz	1M to 100MHz	
PoE	IEEE802.3af	○	—		
	IEEE802.3at	○	—		
Transmission loss		1.0dB or less※2	2.0dB or less		3.0dB or less
Impulse durability (Total of 8 cores)	Category C2 (8/20μs)	5kA (10 times)	—		
	Category D1 (10/350μs)	2.5kA (2 times)	—		
Voltage protection level (Impulse dischage voltage)	To ground	500V or less (1.2/50μs 10kV)	—		
AC withstand voltage		—	2kV or more	4kV or more	
Impulse withstand voltage	10/700μs	—			13kV or more
	1.2/50μs	—	5kV or more	15kV or more	10kV or more
Maximum continuous operating voltage※3	Between PoE Terminals	DC60V	—		
	Between Each Line and the Earth Terminal	DC60V	—		
Rated current※3		600mA	—		

※1：This product supports to Cat.6. It does not support Cat.6A. ※2：Transmission frequency bandwidth DC~100MHz
※3：IEEE802.3af and IEEE802.3at ※RoHS compliant

■DIN rail rack panel「19-PD35」for SPD mounting (Sold separately) RoHS

This product can be easily installed to 19 inch rack 1U when several DIN rail mounting type LAN SPDs are used.

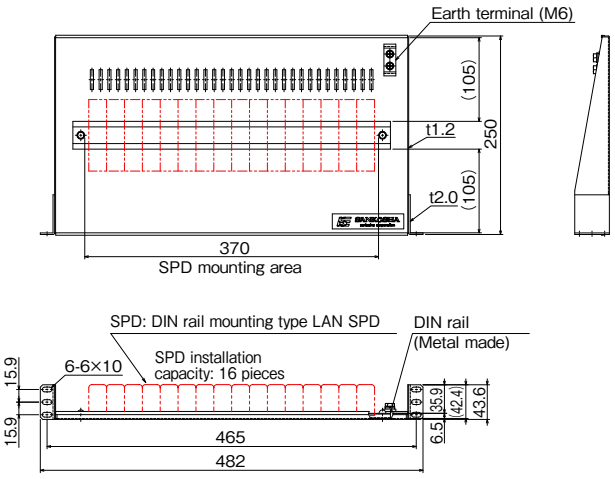

・Applicable for connecting Metal DIN rail with the earthing at once
・16 pieces of SPD to 19 inch rack 1U at maximum


(This product doesn't include SPD.)

■LAN SPD fixing bracket「LAN-MB1」for 1 piece (Sold separately) RoHS

This product can fix DIN rail mounting type LAN SPD to inside a box etc.

SPD for co-axial connectors

GPSP1-L1-TNCJJ
GPSP1-L1-NJJ

IEC Category C2 compliant

Conforming standards

- IEC 61643-21 compliant
- RoHS compliant

Applications

- GPS anntena port

Mass: about 220 (g)

■Characteristics

Item		Performance	
		GPSP1-L1-TNCJJ	GPSP1-L1-NJJ
Connector type		TNC (J-J)	N (J-J)
Frequency bandwidth		1575.42MHz±5MHz	
V.S.W.R		1.3 or less	
Insertion loss		1.0dB or less	
Impedance		50Ω	
Permissible power		10W	
Voltage protection level		10V or kess	
Impulse durability	Category C2 8/20μs	2kA (10 times)	

■External view

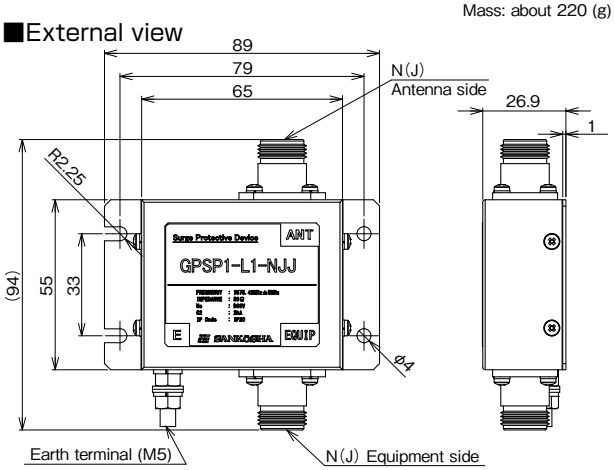

CX-E-60

IEC Category C2/D1 compliant

Conforming standards

- IEC 61643-21 compliant
- RoHS compliant

Features

- Optimazed design for coxial LAN converter
- PoE power supply function to cameras etc enabled
- Low insertion loss less than 1.0dB in DC to 50MHz
- Insulation type BNC conncetor

Applications

- Coxial LAN converters
- Monitoring cameras (power source superimposed)
- Data transmission devices

Dimensions: W38×D95×H40 (mm)
Mass 130 (g)

■Characteristics

Item		Performance
Connector type		BNC (J-J)
Frequency bandwidth		DC to 50MHz
Insertion loss		1.0dB or less
Maximum continuous operating voltage		DC70V
Impedance		50Ω/75Ω
Rated current		1A
Voltage protection level	1.2/50μs, 10kV	250V or less (between conductors) 500V or less (to ground)
Impulse durability	Category C2 8/20μs	10kA (10 times)
	Category D1 10/350μs	2kA (2 times)
Series resistance		1Ω±20%

■External view

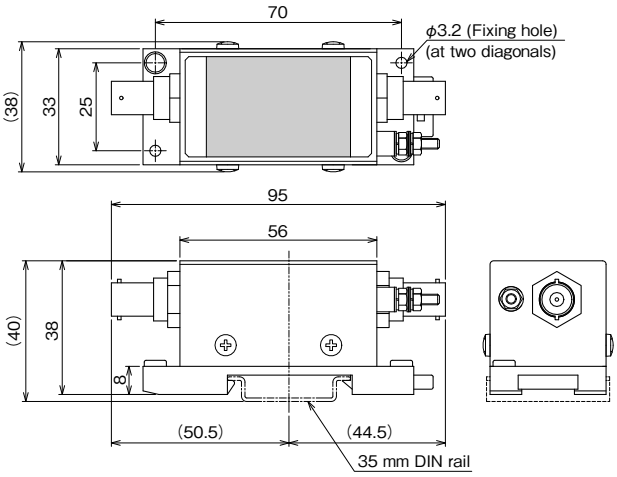

CX-E-ECS

IEC Category C2/D1 compliant

Conforming standards

- IEC 61643-21compliant
- RoHS compliant

Applications

- Monitoring cameras (Power superimposition enabled)
- Data transmission devices

Dimensions: W38×D95×H40 (mm)
Mass 125 (g)

■Characteristics

Item		Performance
Connector type		BNC (J-J)
Frequency bandwidth		DC to 30 MHz
Insertion loss		1.0dB or less
Maximum continuous operating voltage		DC58V
Impedance		50Ω/75Ω
Rated current		1A
Voltage protection level		250V or less (between conductors) 500V or less (to ground)
Impulse durability	Category C2 (8/20μs)	10kA (10 times)
	Category D1 (10/350μs)	5kA (2 times)

■External view

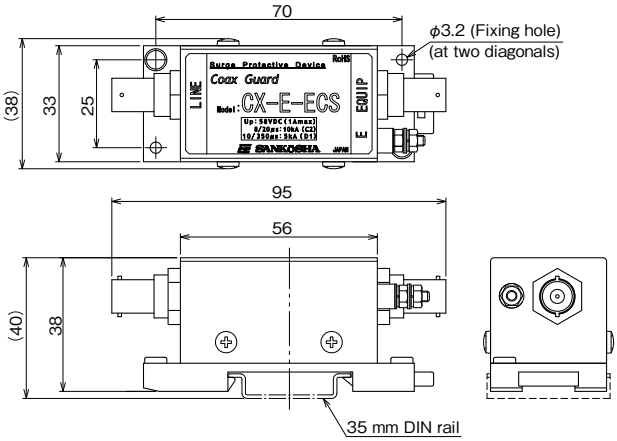

B-JP-1 (50Ω and 75Ω)

IEC Category C2/D1 compliant

Conforming standards

- IEC 61643-21compliant
- RoHS compliant

Applications

- Monitoring cameras
- Video signals

Mass: 24 (g)

■Characteristics

Item		Performance	
		B-JP-1(50Ω)	B-JP-1(75Ω)
Connector type		BNC type (P-J)	
Frequency bandwidth		DC to 1.6GHz	DC to 400MHz
V.S.W.R		1.1 or less (DC to 1GHz) 1.25 or less (1 to 1.6GHz)	1.1 or less
Insertion loss		0.2dB or less (DC to 1GHz) 0.3dB or less (1 to 1.6GHz)	0.2dB or less
Impedance		50Ω	75Ω
Permissible power		50W	
Voltage protection level	1.2/50μs, 10kV	1.5 kV or less	
DC sparkover voltage		DC350V±20%	
Impulse durability	Category C2 (8/20μs)	5kA (10 times)	
	Category D1 (10/350μs)	1kA (2 times)	

■External view

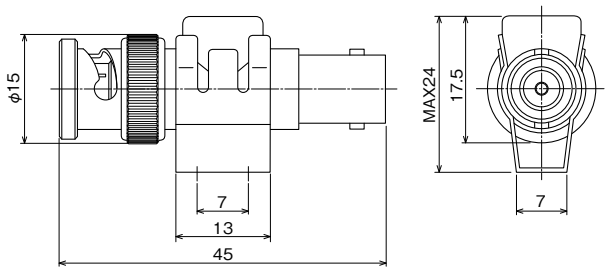

SPD for co-axial connectors

B-JP-7
B-JP-8

IEC Category C2/D1 compliant

Conforming standards

- IEC 61643-21compliant
- RoHS compliant

Applications

- Monitoring cameras

Mass: 74 (g)

■Characteristics

Item		Performance	
		B-JP-7	B-JP-8
Connector type		BNC type (P-J)	
Frequency bandwidth		DC to 1GHz	DC to 400MHz
V.S.W.R		1.2 or less	
Insertion loss		0.2dB or less	
Impedance		50Ω	75Ω
Permissible power		10W	50W
Voltage protection level		1.5 kV or less	
DC sparkover voltage		DC 180V or more	
Impulse durability	Category C2 (8/20μs)	20kA (10 times)	
	Category D1 (10/350μs)	2.5kA (2 times)	

■External view

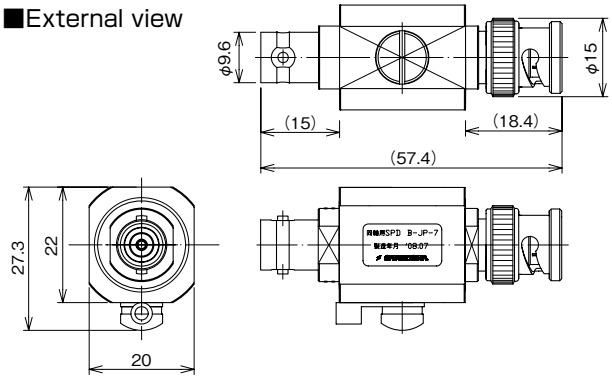

B-JP-9

IEC Category C2/D1 compliant
EX-SDI standard compliant

Conforming standards

- IEC 61643-21 compliant
- RoHS compliant

Applications

- HD-SDI devices (monitoring cameras, broadcasting facilities etc)

Mass: 60 (g)

■Characteristics

Item		Performance
Connector type		BNC (J-J)
Frequency bandwidth		DC to 3GHz
V.S.W.R		1.5 or less
Insertion loss		0.5dB or less
Impedance		75Ω
Permissible power		10W
Voltage protection level		700V or less
DC sparkover voltage		DC120V or more
Impulse durability	Category C2 (8/20μs)	5kA (10 times)
	Category D1 (10/350μs)	2.5kA (2 times)

■External view

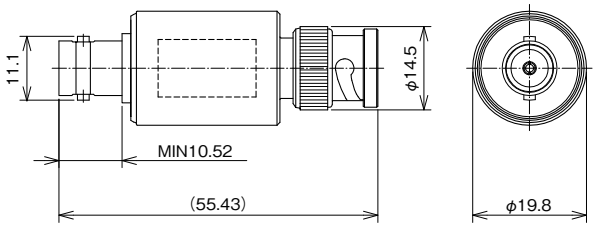

N-JP-7
N-JP-8 (Permissible power 200W)

IEC Category C2/D1 compliant

Conforming standards

- IEC 61643-21compliant
- RoHS compliant

Applications

- Wireless communication devices
- Measuring instruments

Mass: 106 (g)

■Characteristics

Item		Performance	
		N-JP-7	N-JP-8
Connector type		N type (P-J)	
Frequency bandwidth		DC to 2.2GHz	
V.S.W.R		1.2 or less	
Insertion loss		0.2dB or less	
Impedance		50Ω	
Permissible power		10W	Rating: 100W/Max: 200W
Voltage protection level	1kV/μs	700V or less	—
	1.2/50μs (Open circuit voltage) 8/20μs, 5kA (Short circuit voltage)	—	1.1kV or less
DC sparkover voltage		DC 180V or more	DC 400-600V
Impulse durability	Category C2 (8/20μs)	20kA (10 times)	
	Category D1 (10/350μs)	2.5kA (2 times)	

■External view

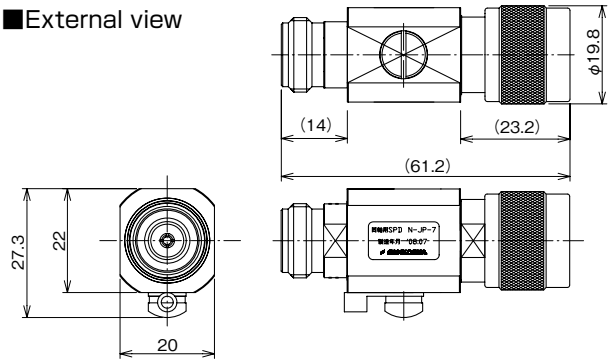

N-JP-1S

IEC Category C2/D1 compliant

Conforming standards

- IEC 61643-21compliant
- RoHS compliant

Applications

- Wireless communication devices
- Measuring instruments

Mass: 80 (g)

■Characteristics

Item		Performance
Connector type		N type (P-J)
Frequency bandwidth		DC to 3GHz
V.S.W.R		1.2 or less
Insertion loss		0.2dB or less
Impedance		50Ω
Permissible power		10W
Voltage protection level		700V or less
DC sparkover voltage		DC 120V or more
Impulse durability	Category C2 (8/20μs)	5kA (10 times)
	Category D1 (10/350μs)	2.5kA (2 times)

■External view

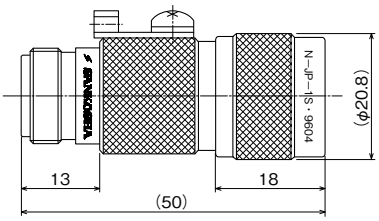

SPD for co-axial connectors

N-JP-5
(Permissible power 60W)

IEC Category C2/D1 compliant

Conforming standards
- IEC 61643-21 compliant
- RoHS compliant

Applications
- Wireless communication devices
- Measuring instruments

Mass: 80 (g)

■Characteristics

Item		Performance
Connector type		N type (P-J)
Frequency bandwidth		DC to 3GHz
V.S.W.R		1.2 or less
Insertion loss		0.3dB or less
Impedance		50Ω
Permissible power		60W
Voltage protection level		700V or less
DC sparkover voltage		DC 200V or more
Impulse durability	Category C2 (8/20μs)	2kA(10 times)
	Category D1 (10/350μs)	5kA(1 time)

■External view

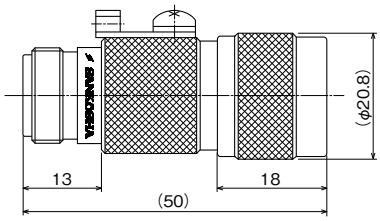

N-JP-6

Conforming standards
- RoHS compliant

Applications
- Wireless communication devices
- Measuring instruments

Mass: 86 (g)

■Characteristics

Item		Performance
Connector type		N type (P-J)
Frequency bandwidth		4.7GHz-5.7GHz
V.S.W.R		1.2 or less
Insertion loss		0.5dB or less
Impedance		50Ω
Permissible power		10W
Voltage protection level		700V or less
DC sparkover voltage		DC 120V or more
Impulse discharge current	8/20μs	10kA (1 time)

■External view

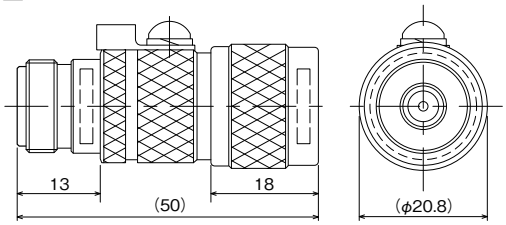

RC10-NPNP

Conforming standards

- IEC 61643-21 compliant
- RoHS compliant

Applications

- Wireless communication devices
- Transmitter, reciever, antenna

■Characteristics

Item		Performance		
		RC10-NPNP-10	RC10-NPNP-15	RC10-NPNP-30
Cable length (L)※		10m	15m	30m
Transmission characteristics	Frequency bandwidth	2,400MHz to 2,500MHz		
V.S.W.R		1.3 or less		
Insertion loss		2.0dB or less	2.5dB or less	4.2dB or less
Impedance		50Ω		
Permissible power		50W		
Voltage protection level (Up)	1.2/50μs 10kV	1,100V or less		
Impulse durability	Category C2 (8/20μs)	5kA (5 times)		

※ Length can be customized

■External view

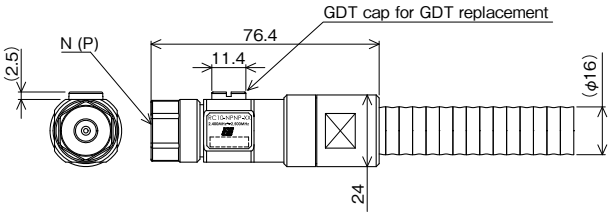

SMA-JP-1

IEC Category C2/D1 compliant

Conforming standards

- IEC 61643-21 compliant
- RoHS compliant

Applications

- Microwave wireless communication devices

Mass: 9.3 (g)

■Characteristics

Item		Performance
Connector type		SMA type (P-J)
Frequency bandwidth		DC to 3GHz
V.S.W.R		1.2 or less
Insertion loss		0.3dB or less
Impedance		50Ω
Permissible power		10W
Voltage protection level		700V or less
DC sparkover voltage		DC 120V or more
Impulse discharge current	Category C2 (8/20μs)	5kA (10 times)
	Category D1 (10/350μs)	2.5kA (2 times)

■External view

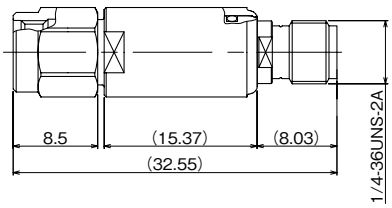

SPD for co-axial connectors

F-JP-1W

IEC Category C2/D1 compliant

Conforming standards

- IEC 61643-21compliant
- RoHS compliant

Applications

- CS, BS, TV tuners

Mass: 68 (g)

■Characteristics

Item		Performance
Connector type		F type (P-J)
Frequency bandwidth		DC to 3GHz
V.S.W.R		1.5 or less
Insertion loss		0.5dB or less
Impedance		75Ω
Permissible power		50W
Voltage protection level		700V or less
DC sparkover voltage		DC 200V or more
Impulse durability	Category C2 (8/20μs)	2kA (10 times)
	Category D1 (10/350μs)	1kA (2 times)

■External view

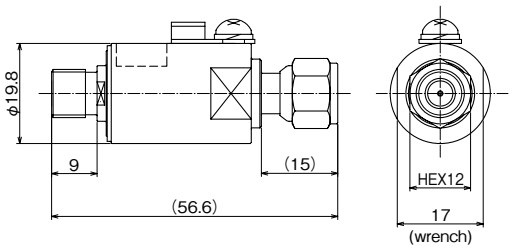

FT-ARR (60)

Conforming standards

- RoHS compliant

Applications

- For CATV amps

Mass: 102 (g)

■Characteristics

Item		Performance
Connector type		FT type
Frequency bandwidth		DC to 1GHz
V.S.W.R		1.2 or less
Insertion loss		0.2dB or less
Impedance		75Ω
Permissible power		10W
Voltage protection level	10/200μs, 5kV	1.2kV or less
DC sparkover voltage		DC 180V or more
Impulse discharge current	8/20μs	10kA (1 time)

■External view

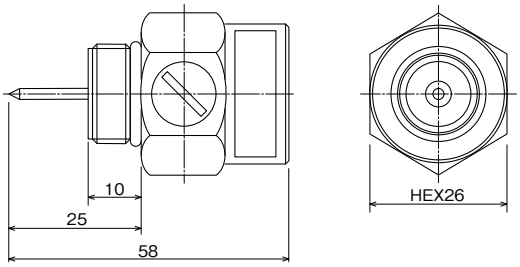

TNC-JP-2

IEC Category C2/D1 compliant

Conforming standards

●RoHS compliant

Applications

●Mobile telephone base stations
●Wireless LAN antennae
●Various kinds of communication devices

Mass: 42 (g)

■Characteristics

Item		Performance
Connector type		TNC type (P-J)
Frequency bandwidth		DC to 3GHz
V.S.W.R		1.2 or less
Insertion loss		0.3dB or less
Impedance		50Ω
Permissible power		10W
Voltage protection level		700V or less
DC sparkover voltage		DC 120V or more
Impulse durability	Category C2 (8/20μs)	5kA (10 times)
	Category D1 (10/350μs)	2.5kA (2 times)

■External view

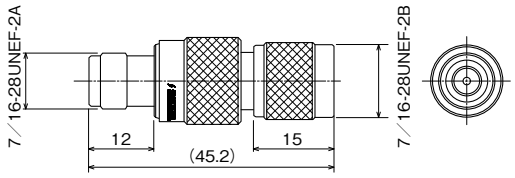

TNC-JP-3

IEC Category C2/D1 compliant

Conforming standards

●RoHS compliant

Applications

●Mobile telephone base stations
●Wireless LAN antennae
●Various kinds of communication devices

Mass: 46 (g)

■Characteristics

Item		Performance
Connector type		TNC type (P-J)
Frequency bandwidth		DC to 3GHz
V.S.W.R		1.2 or less
Insertion loss		0.3dB or less
Impedance		50Ω
Permissible power		10W
Voltage protection level		700V or less
DC sparkover voltage		DC 120V or more
Impulse durability	Category C2 (8/20μs)	5kA (10 times)
	Category D1 (10/350μs)	2.5kA (2 times)

■External view

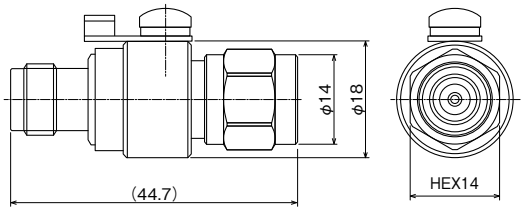

TNC-JP-5

Conforming standards

●RoHS compliant

Applications

●Mobile telephone base stations
●Wireless LAN antennae
●Various kinds of communication devices

Mass: 42 (g)

■Characteristics

Item		Performance
Connector type		TNC type (P-J)
Frequency bandwidth		DC to 3GHz
V.S.W.R		1.2 or less
Insertion loss		0.3dB or less
Impedance		50Ω
Permissible power		60W
Voltage protection level		700V or less
DC sparkover voltage		DC 200V or more
Impulse discharge current	8/20μs	5kA (1 time)

■External view

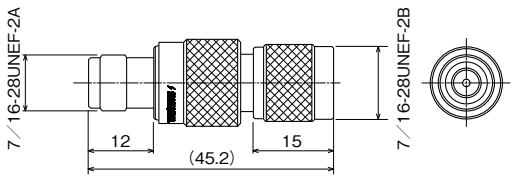

7_16DIN-JPI-2000CTU
7_16DIN-JPI-1800CTU

These products are co-axial protective devices for the protection of various types of devices from abnormal voltage caused by lightning surges, etc., entering co-axial power supply systems.
Lightning surges entering via antennae pass through the high insulation non-invasive device side and are discharged to ground via the short stub.

Mass: 500(g)

■Characteristics

Item		Performance	
		7_16DIN-JPI-2000CTU	7_16DIN-JPI-1800CTU
Frequency range		1920MHz to 2170MHz (1920MHz to 1980MHz/2110MHz to 2170MHz)	1755MHz to 1880MHz (1755MHz to 1785MHz/1850MHz to 1880MHz)
Characteristic impedance		50Ω	
Insertion loss (LOSS)		0.2dB or less	
Voltage standing wave ratio (VSWR)		1.20 or less	
Impulse discharge current	1.2/50μs	30kV or more	
Operating temperature range		-20℃to +60℃ 90% or less (no condensation)	
Operating humidity range		30% to 90% (no condensation)	
Storage temperature – humidity		Operating temperature - humidity	
Input – output interface type		Device side: DIN7/16 (female) Antenna side: DIN7/16 (male)	

■External view

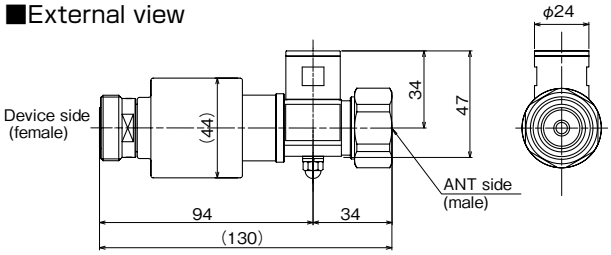

Application and Performance of SPD for co-axial connectors

Item		Performance and Applications			
		GPSP1-L1-TNCJJ IEC	GPSP1-L1-NJJ IEC	CX-E-60 IEC	CX-E-ECS IEC
Applications		GPS anntena port		Coxial LAN converters, Monitoring cameras(power source superimposed), Data transmission devices	Monitoring cameras (co-axial power supply OK) Data transmission devices
Connector type		TNC type (J-J)	N type (J-J)	BNC type (J-J)	
Frequency bandwidth		1575.42MHz ± 5MHz		DC to 50MHz	DC to 30MHz
V.S.W.R		1.3 or less		—	
Insertion loss		1.0dB or less		1.0dB or less	
Impedance		50Ω		50Ω/75Ω	
Permissible power		10W		—	
Voltage protection level		10V or less		250V or less (between conductors) 500V or less (to ground) (1.2/50μs, 10kV)	
Impulse durability	Category C2 (8/20μs)	2kA (10 times)		10kA (10 times)	
	Category D1 (10/350μs)	—		2kA (2 times)	5kA (2 times)
Operating environmental conditions	Rated operating temperature Rated operating humidity	Indoor -40℃~+85℃ 90% or less (no condensation)		Indoor -35℃ to +60℃ 90% or less (no condensation)	

※RoHS compliant

Item		Performance and Applications							
		B-JP-1 (50Ω) IEC	B-JP-1 (75Ω) IEC	B-JP-7 IEC	B-JP-8 IEC	B-JP-9 IEC	N-JP-7 IEC	N-JP-8 IEC	N-JP-1S IEC
Applications		Monitoring cameras Video signals		Monitoring cameras		HD-SDI devices (monitoring cameras, broadcasting facilities etc)	Wireless communication devices Measuring instruments		
Connector type		BNC type (P-J)					N type (P-J)		
Frequency bandwidth		DC to 1.6GHz	DC to 400MHz	DC to 1GHz	DC to 400MHz	DC to 3GHz	DC to 2.2GHz		DC to 3GHz
V.S.W.R		1.1 or less (DC-1GHz) 1.25 or less (1-1.6GHz)	1.1 or less	1.2 or less		1.5 or less	1.2 or less		
Insertion loss		0.2dB or less (DC-1GHz) 0.3dB or less (1-1.6GHz)	0.2dB or less			0.5dB or less	0.2dB or less		
Impedance		50Ω	75Ω	50Ω	75Ω		50Ω		
Permissible power		50W		10W	50W	10W	10W	200W	10W
Voltage protection level		1.5kV or less (1.2/50μs, 10kV)		1.5kV or less		700V or less	700V or less	1.1kV or less (1.2/50μs, 10kV : Open circuit voltage, 8/20μs, 5kA : Short circuit voltage)	700V or less
DC sparkover voltage		—					DC180V or more	DC400-600V	DC120V or more
Impulse durability	Category C2 (8/20μs)	DC350V±20%		DC 180V or more		DC120V or more	20kA (10 times)		5kA (10 times)
	Category D1 (10/350μs)	5kA (10 times)		20kA (10 times)		5kA (10 times)	2.5kA (2 times)		
Impulse discharge current	8/20μs	1kA (2 times)		2.5kA (2 times)			—		
Operating environmental conditions	Rated operating temperature Rated operating humidity	-40℃ to +70℃ 90% or less (no condensation)					-40°C to +70°C 90% or less (no condensation)	-40℃ to +70℃ 95% or less (no condensation)	-40°C to +70°C 90% or less (no condensation)

※RoHS compliant

Item		Performance and Applications							
		N-JP-5 IEC	N-JP-6	RC10-NPNP-10 IEC	RC10-NPNP-15 IEC	RC10-NPNP-30 IEC	SMA-JP-1 IEC	F-JP-1W IEC	FT-ARR (60)
Applications		Wireless communication devices Measuring instruments		Wireless communication devices, Transmitter, reciever, antenna			Microwave wireless communication devices	CS, BS, TV tuners	For CATV amps
Connector type		N type (P-J)		—			SMA type (P-J)	F type (P-J)	FT type
Frequency bandwidth		DC to 3GHz	4.7 to 5.7GHz	2,400MHz to 2,500MHz			DC to 3GHz		DC to 1GHz
V.S.W.R		1.2 or less		1.3 or less			1.2 or less	1.5 or less	1.2 or less
Insertion loss		0.3dB or less	0.5dB or less	2.0dB or less	2.5dB or less	4.2dB or less	0.3dB or less	0.5dB or less	0.2dB or less
Impedance		50Ω		50Ω			50Ω	75Ω	
Permissible power		60W	10W	50W			10W	50W	10W
Voltage protection level		700V or less		1,100V or less (1.2/50μs 10kV)			700V or less		1.2kV or less (10/200μs, 5kV)
DC sparkover voltage		DC200V or more	DC120V or more	DC700V			DC 120V or more	DC 200V or more	DC 180V or more
Impulse durability	Category C2 (8/20μs)	2kA (10 times)	—	5kA (5 times)			5kA (10 times)	2kA (10 times)	—
	Category D1 (10/350μs)	1kA (2 times)	—				2.5kA (2 times)	1kA (2 times)	—
Impulse discharge current	8/20μs	—	10kA (1 time)	—			—	—	10kA (1 time)
Operating environmental conditions	Rated operating temperature Rated operating humidity	-30°C to +60°C 95% or less (no condensation)	-30°C to +60°C 90% or less (no condensation)	-40°C to +80°C 5% to 96% (no condensation)			-20°C to +60°C 90% or less (no condensation)	-40°C to +70°C 90% or less (no condensation)	-20°C to +60°C 90% or less (no condensation)

※RoHS compliant

Item		Performance and Applications				
		TNC-JP-2 IEC	TNC-JP-3 IEC	TNC-JP-5	7_16DIN-JPI-2000CTU	7_16DIN-JPI-1800CTU
Applications		Mobile telephone base stations, Wireless LAN antennae Various kinds of communication devices			Mobile telephone base stations	
Connector type		TNC type (P-J)			N type (P-J)	
Frequency bandwidth		DC to 3GHz			1920-2170MHz	1755-1880MHz
V.S.W.R		1.2 or less				
Insertion loss		0.3dB or less			0.2dB or less	
Impedance		50Ω				
Permissible power		10W		60W	—	
Voltage protection level		700V or less			—	
DC sparkover voltage		DC 120V or more		DC200V or more	—	
Impulse durability	Category C2 (8/20μs)	5kA (10 times)		—	—	
	Category D1 (10/350μs)	2.5kA (2 times)		—	—	
Impulse discharge current	8/20μs	—		5kA (1 times)	30 kV(1.2/50μs)	
Operating environmental conditions	Rated operating temperature Rated operating humidity	-20℃ to +60℃ 90% or less (no condensation)				

※RoHS compliant

■DIN rail rack panel [19-PCXE] for SPD "CX" series (Selling separately) RoHS

1U rack panel for 19 inch rack and multiple use of DIN rail mountable SPD enabled
Corresponding SPD: CX-E-60, CX-E-ECS

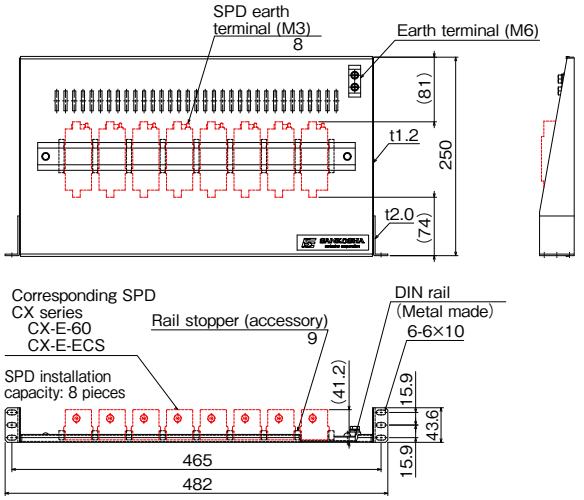

・Earth connection together with metal DIN rail
・Maximum 8 corresponding SPD mountable to 19 inch rack 1U

Earthing SPD (earth balancer)

MZS-EB

Conforming standards
●RoHS compliant

Features
●Corresponds to IEC Class Ⅰ test
●Impulse current up to 75 kA (direct strike waveform 10/350 μs)
●DIN rail mountable (35 mm)

Applications
●Earth equipotentialization (eliminates electropotential difference)

Dimensions: W35×D125×H66 (mm)
Mass: 300 (g)

■Characteristics

Item	Measurement conditions	Performance
Impulse current (Iimp)	10/350μs	75kA
Nominal discharge current (In)	8/20μs	20kA
Leak current (I_{PE})	DC360V	20 μA or less
Voltage protection level (Up)	Based on IEC	1.5kV

■External view

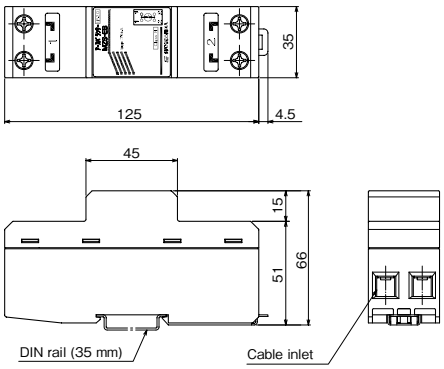

■Circuit diagram

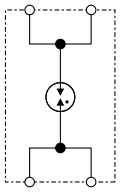

MZCR-EB

Conforming standards
●RoHS compliant

Features
●Corresponds to IEC Class Ⅱ test
●Impulse current up to 10 kA (direct strike waveform 10/350 μs)
●DIN rail mountable (35 mm)
●Round type crimped terminal for M4 (width less than 12 mm) (EBN type)

Applications
●Earth equipotentialization (eliminates electropotential difference)

Dimensions: W18×D90×H64 (mm)
Mass: 115 (g)

■Characteristics

Item	Measurement conditions	Performance
Impulse current (Iimp)	10/350μs	10kA
Nominal discharge current (In)	8/20μs	60kA
Insulation resistance	DC500V	100MΩ or more
Voltage protection level (Up)	Based on IEC	1kV

■External view

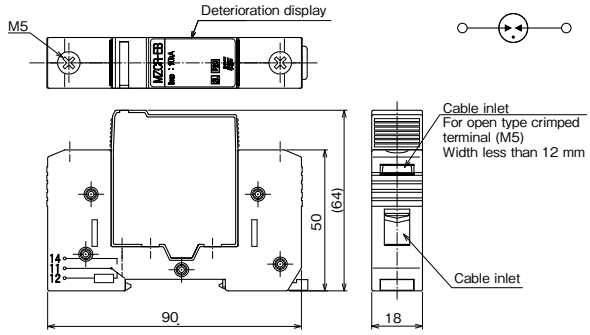

■Circuit diagram

MZCR-S110
MZCR-S220
MZCR-S380
MZCR-S60

(MZCR-S220) Dimensions: W36×D10 2×H64 (mm)
Mass: 250 (g)

Conforming standards

- IEC 62305-4 compliant
- RoHS compliant
- CRCC approved (TB/T2311-2008,TB/T3074-2003)

Features

- Discharge current up to 40kA (induced lightning waveform 8/20μs)
- Deterioration display function mounted (warning contact output terminal attached)
- Plug-in type
- DIN rail mountable (35mm)
- Round type crimped terminal for M4 (width less than 12mm)

Applications

- Low voltage power supply circuits in switchboards and distribution boards (AC60V/AC220V/AC380V)
- Power supply circuits in control equipment (AC60V/AC220V/AC380V)

■External view

(E.g.: MZCR-S220)

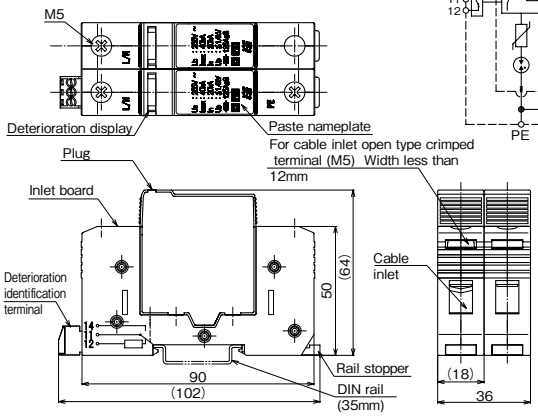

■Circuit diagram

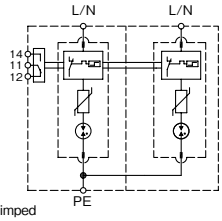

■Characteristics

Item	Measurement conditions	Performance			
		MZCR-S110	MZCR-S220	MZCR-S380	MZCR-S60
Maximum continuous operating voltage (50/60Hz) (Uc)	—	AC130V	AC275V	AC420V	AC75V
Maximum discharge current (Imax)	8/20μs	40kA			
Nominal discharge current (In)	8/20μs	20kA			
Voltage protection level (Up)	Based on IEC	1.0kV or less	1.5kV or less		700V or less

MZPW-S275
MZPW-S385
MZPW-S75

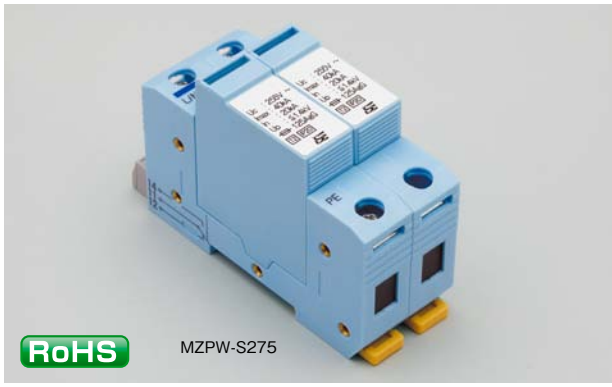

(MZPW-S275) Dimensions: W36×D102×H64 (mm)
Mass: 250(g)

Conforming standards

- IEC 62305-4 compliant
- RoHS compliant
- CRCC approved (TB/T2311-2008,TB/T3074-2003)

Features

- Discharge current up to 40kA (induced lightning waveform 8/20μs)
- Deterioration display function mounted (warning contact output terminal attached)
- Plug-in type
- DIN rail mountable (35mm)
- Round type crimped terminal for M4 (width less than 12mm)

Applications

- Low voltage power supply circuits in switchboards and distribution boards (AC60V/AC220V/AC380V)
- Power supply circuits in control equipment (AC60V/AC220V/AC380V)

■External view

(E.g.: MZPW-S275)

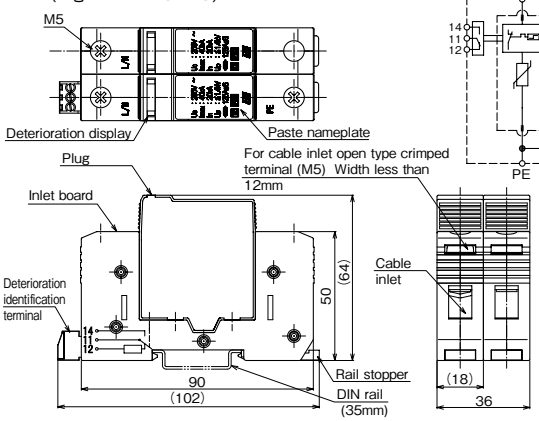

■Circuit diagram

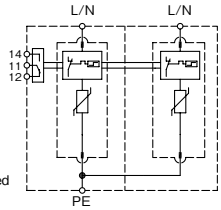

■Characteristics

Item	Measurement conditions	Performance		
		MZPW-S275	MZPW-S385	MZPW-S75
Maximum continuous operating voltage (50/60Hz) (Uc)	—	AC275V	AC385V	AC75V
Maximum discharge current (Imax)	8/20μs	40kA		
Nominal discharge current (In)	8/20μs	20kA		
Voltage protection level (Up)	Based on IEC	1.0kV or less	1.5kV or less	700V or less

MZCR-P220
MZCR-P380
MZCR-P24

Conforming standards

- IEC 62305-4 compliant
- RoHS compliant
- CRCC approved (TB/T2311-2008,TB/T3074-2003)

Features

- Discharge current up to 40kA (induced lightning waveform 8/20μs)
- Deterioration display function mounted (warning contact output terminal attached)
- Plug-in type
- DIN rail mountable (35mm)
- Round type crimped terminal for M4 (width less than 12mm)

Applications

- Low voltage power supply circuits in switchboards and distribution boards (AC60V/AC220V/AC380V)
- Power supply circuits in control equipment (AC60V/AC220V/AC380V)

■Characteristics

Item	Measurement conditions	Performance		
		MZCR-P220	MZCR-P380	MZCR-P24
Maximum continuous operating voltage (50/60Hz) (Uc)	—	AC275V	AC510V	DC38V
Maximum discharge current (Imax)	8/20μs	40kA		10kA
Nominal discharge current (In)	8/20μs	20kA		1.5kA
Voltage protection level (Up)	Based on IEC	1.5kV or less	1.8kV or less	220V or less

(MZCR-P220) Dimensions: W36×D102×H64 (mm)
Mass: 250 (g)

■External view

(E.g.: MZCR-P220)

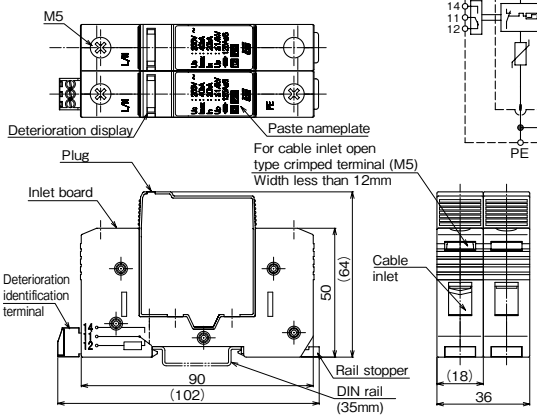

■Circuit diagram

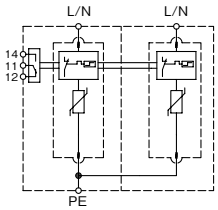

SKYW-P220
SKYW-P380

Conforming standards

- RoHS compliant
- CRCC approved (TB/T2311-2008)

Features

- Discharge current up to 80kA (induced lightning waveform 8/20μs)
- Deterioration display function (warning contact output terminal attached)
- Plug-in type
- DIN rail mountable (35mm)

Applications

- Low voltage power supply circuits in switchboards and distribution boards (AC220V/AC380V)
- Power supply circuits in control equipment (AC220V/AC380V)

■Characteristics

Item	Measurement conditions	Performance	
		SKYW-P220	SKYW-P380
Maximum continuous operating voltage (50Hz/60Hz) (Uc)	L-L, L/N-PE	275V	420V
Maximum dicharge current (Imax)	8/20μs	80kA	80kA
Nominal discharge current (In)	8/20μs	40kA	40kA
Voltage protection level (Up)	40kA, 8/20μs	2.1kV or less	2.8kV or less

(SKYW-P220) Dimensions: W36×D97×H67 (mm)
Mass: 250(g)
(SKYW-P380) Dimensions: W36×D97×H67 (mm)
Mass: 256 (g)

■External view

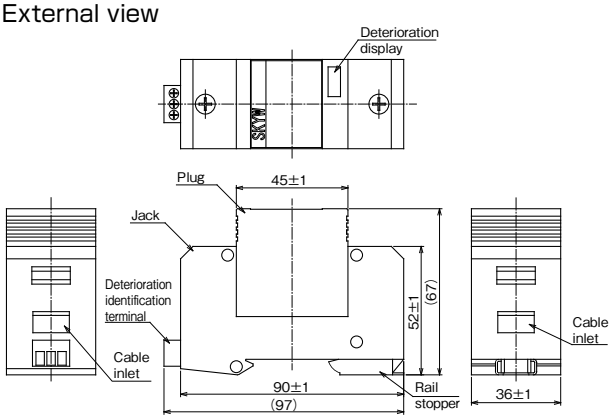

SPD for railway

S24B
S100
S200
S650

Conforming standards

- RoHS compliant
- KRS SG 0060-80R compliant

Features

- Maximum discharge current up to 40kA (induction lightning waveform 8/20μs)
- Lightning surge current measurement, Replacement recommendation display function
- Lightning surge current count display function
- Plug-in type
- Deterioration display function (warning contact output terminal)
- DIN rail mountable (35mm)

Applications

- Low voltage power supply circuits in switchboards and distribution boards

(S24B·S100) Dimensions: W54×D99×H81 (mm)
Mass: 290 (g)
(S200) Dimensions: W54×D99×H81 (mm)
Mass: 310 (g)
(S650) Dimensions: W72×D99×H81 (mm)
Mass: 370 (g)

■Circuit diagram

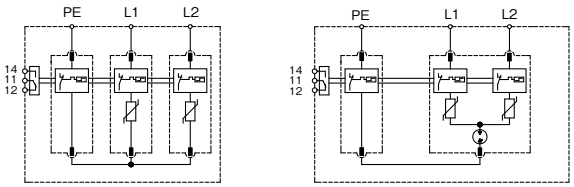

S24B S650

■External view

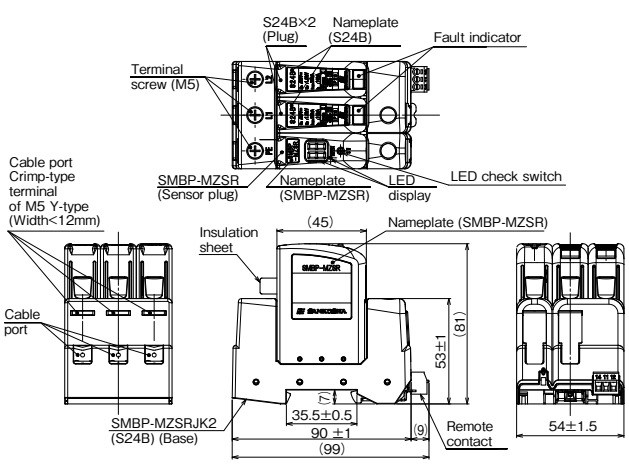

S24B

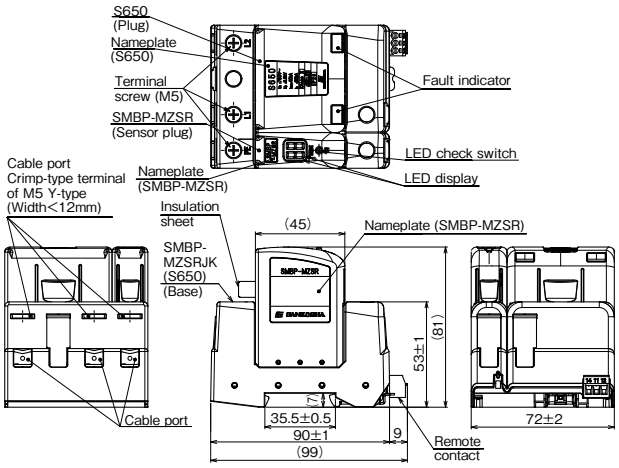

S650

■Characteristics

Item	Measurement conditions	Performance			
		S24B	S100	S200	S650
Maximum continuous operation voltage (Uc)	—	DC30V	AC138V	AC275V	AC780V
Maximum discharge current (Imax)	8/20μs	20kA	40kA		
Nominal discharge current (In)	8/20μs	10kA	20kA		
Voltage protection level (Up)	L-PE	1.0kV	1.0kV	1.4kV	2.5kV

HS0245
HS0605 (DC)
HS0605 (AC)
HS1105
HS2205

Conforming standards

- RoHS compliant
- KRS SG 0018-15R compliant

Features

- Maximum discharge current up to 40kA (induction lightning waveform 8/20μs)
- Lightning surge current measurement, Replacement recommendation display function
- Lightning surge current count display function
- Deterioration display function
- Both DIN rail (35mm) and DIN rail G TS32 (32mm) mountable

Applications

- Signal relay line (power supply)

■External view

(E.g.: HS2205)

(HS-2205) Dimensions: W25×D79×H76.2 (mm)
Mass: 170 (g)

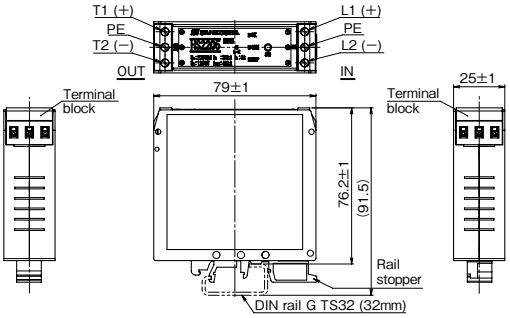

■Characteristics

Item	Measurement conditions	Performance				
		HS0245 (DC)	HS0605 (DC)	HS0605 (AC)	HS1105 (AC)	HS2205 (AC)
Maximum continuous operating voltage (Uc)	—	DC30V	DC75V	AC75V	AC138V	AC275V
Maximum discharge current (Imax)	8/20μs	25kA		40kA		
Nominal discharge current (In)	8/20μs	10kA		20kA		
Voltage protection level (Up)	L-PE	400V		350V	750V	1250V
	L-L	200V	300V	—	—	—

S14P
S14P-S

Conforming standards

- RoHS compliant

Features

- Lightning surge current measurement, Replacement recommendation display function (S14P-S)

Applications

- ABS signal line

(S14P plug) Dimensions: W22×D100×H86 (mm)
Mass: 110 (g)
(S14P-S plug) Dimensions: W22×D100×H86 (mm)
Mass: 120 (g)
(Jack) Dimensions: W20×D64×H23 (mm)
Mass: 10 (g)

■Characteristics

Item	Measurement conditions	Performance	
		S14P	S14P-S
Maximum continuous operating voltage (Uc)	—	DC30V	
Rated current	L1-T1, L2-T2	DC100mA	
Voltage protection level (Up)	1.2/50μs 10kV	T1-E, T2-E: 120V or less	
Impulse durability	Category C2 (8/20μs)	5kA (10 times)	
Maximum discharge current (Imax)	8/20μs	25kA	
Insertion loss	DC to 400kHz	1dB or less	
Series resistance	DC100mA, L1-T1, L2-T2	5Ω±10%	

■External view

(E.g.: S14P-S)

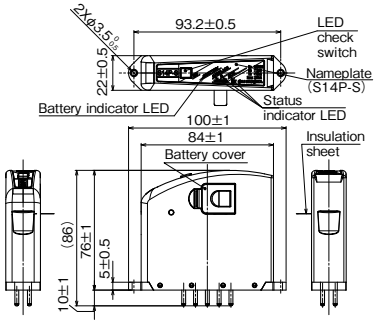

S14P, S14P-S common jack

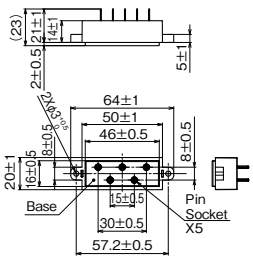

Lightning protective elements
GDT (Gas Discharge Tube) Ceramic arrester

These lightning protective elements utilize the electrical discharge phenomenon that occurs across the electrodes disposed within the ceramic arresters to inhibit surge voltage entering communication lines and signaling lines.

■Model identification

2-electrode tubes :

□□□－□□

- Terminal type
  - A : No lead wire
  - B : With lead wire (ϕ1.0, ϕ0.8)
  - C : With case
- Nominal DC sparkover voltage (V)
- Product type
- Outer diameter of arrester
  - 4 : 4mm　08 : 8mm
  - 05 : 5mm　20 : 20mm
  - 06 : 6mm　49 : 49mm
- Envelope type
  - Y : Standard type
  - SD : Surface mounted type

3-electrode element :

3□□-□□□□

- Failsafe type
- Lead wire pitch type
  - (J)1 : 4.4±0.3
  - (J)3 : 5.0±0.3
  - (P)1 : 3.8±0.3 (3Y06)
  - (P)1 : 3.6±0.3 (3YD)
- Terminal type
  - A : No lead wire
  - B : With lead wire (ϕ1.0)
  - BP : With lead wire (ϕ0.8)
  - J : With lead wire (ϕ1.0)
  - P : With lead wire (ϕ0.8)
- Nominal DC sparkover voltage (V)
- Product type and outer diameter
  - VJ : 8mm
  - VH : 8mm
  - 4 : 4mm
  - 06 : 6mm
  - 20 : 20mm
- Envelope type
  - Y : Standard type
  - SD : Surface mounted type
- No. of electrodes

■Caution when using ceramic arresters

When using stand-alone arresters in power supply circuits, it should be borne in mind that, even after the arrester has operated (and abnormal voltage has been eliminated), there may still be continued discharge of the connected supply voltage (follow current phenomenon).
In order to protect power supply circuits from abnormal voltage, please use our SPDs which do not generate follow current rather than stand-alone arresters.

Lightning protective elements
GDT (Gas Discharge Tube) Ceramic arrester types

Item		Performance - Application												
Tubes		2-electrode tubes								3-electrode tubes				
Size		—	φ5	φ6	φ8			φ20	φ49	—	φ6		φ8	
Model		SDH4- [ ]	Y05-[ ]	Y06-[ ]	Y-[ ]	Y08SV-[ ]	U-[ ]	Y20-[ ]	Y49-[ ]	3SD4-[ ]	3Y06-[ ]	3YD-[ ]P1	3J-[ ]	3H-[ ]
Applications		Communication lines Signaling lines						Railway signaling lines Large capacity signaling lines	Railway signaling lines Series capacitor protection Transformer withstand voltage protection	Communication lines Signaling lines				
UL		○	—	—	○	○	○	—	—	○	○	○	○	○
RoHS		○	○	○	○	○	○	○	○	○	○	○	○	○
Voltage (V)	75	○	—	—	—	—	○	—	—	○	—	—	—	—
	90	○	○	○	—	—	○	○	—	○	○	○	○	○
	100	—	—	○	—	—	—	—	—	—	—	—	—	—
	145	○	—	—	—	—	○	—	○	○	—	—	○	—
	150	—	—	—	—	—	—	—	—	—	—	—	—	○
	200	○	—	—	—	—	—	—	—	○	—	—	—	—
	230	○	○	○	—	—	○	○	○	○	○	○	○	○
	250	—	—	—	—	—	○	○	—	—	—	—	○	○
	300	—	—	—	—	—	○	—	—	—	—	—	○	—
	350	○	○	○	—	—	○	○	○	—	○	○	○	○
	400	—	—	—	—	—	○	—	—	—	—	—	○	—
	420	—	—	—	—	—	—	○	—	—	—	—	—	○
	450	—	—	—	—	—	—	—	○	—	—	—	—	—
	470	—	—	—	—	—	○	—	—	—	—	—	—	—
	490	—	—	—	—	—	—	○	—	—	—	—	—	—
	500	—	—	—	—	—	—	—	—	—	—	—	—	○
	550	—	—	—	—	—	—	—	○	—	—	—	—	—
	600	—	○	—	—	—	○	—	—	—	—	—	—	—
	610	—	—	—	—	—	—	○	—	—	—	—	—	—
	700	—	—	—	—	—	—	○	○	—	—	—	—	—
	800	—	—	—	—	—	○	○	—	—	—	—	—	—
	930	—	—	—	—	—	—	—	○	—	—	—	—	—
	1000	—	—	—	—	—	—	—	○	—	—	—	—	—
	1100	—	—	—	—	—	—	○	—	—	—	—	—	—
	1200	—	—	—	—	—	—	○	○	—	—	—	—	—
	1300	—	—	—	—	—	—	○	—	—	—	—	—	—
	1400	—	—	—	—	—	—	—	○	—	—	—	—	—
	1500	—	—	—	○	—	—	—	—	—	—	—	—	—
	1600	—	—	—	—	—	—	○	—	—	—	—	—	—
	2100	—	—	—	○	—	—	—	—	—	—	—	—	—
	2700	—	—	—	—	○	—	—	—	—	—	—	—	—
	3000	—	—	—	○	○	—	—	—	—	—	—	—	—
	4000	—	—	—	○	—	—	—	—	—	—	—	—	—
	6000	—	—	—	○	—	—	—	—	—	—	—	—	—
	12000	—	—	—	—	—	—	—	○	—	—	—	—	—
	23000	—	—	—	—	—	—	—	○	—	—	—	—	—
A	No lead wire	○	○	○	○	○	○	○	—	○	○	—	○	○
B	With lead wire	—	○	○	○	○	○	○	—	—	—	—	○	—
C	With case	—	—	—	—	—	—	○	—	—	—	—	—	—
BP	With lead wire (φ0.8)	—	—	—	—	—	—	—	—	—	—	—	—	—
J1	With lead wire (φ1.0)	—	—	—	—	—	—	—	—	—	—	—	○	○
P1	With lead wire (φ0.8)	—	—	—	—	—	—	—	—	—	○	○	—	○
L	With bracket	—	—	—	—	—	—	—	○	—	—	—	—	—
FS	Failsafe	—	—	—	—	—	—	—	—	—	○	—	○	○

SDH4 series

Conforming standards

- UL standard acquired (E140906)
- RoHS compliant

Features

- Ultra compact surface mounted arrester
- High current durability
- Design regstered

Applications

- Electric devices
- Protection for communication line
- PBX
- FAX

Mass: 0.3 (g)

■Recommended land pattern (Unit: mm)

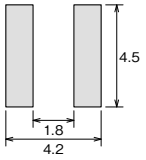

■External view

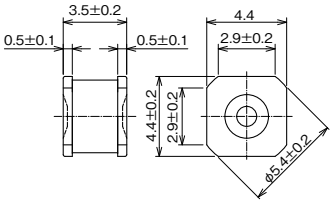

■Characteristics

Item	Conditions	Performance					
		SDH4-75	SDH4-90	SDH4-145	SDH4-200	SDH4-230	SDH4-350
DC sparkover voltage	100V/s	75V±20%	90V±20%	145V±20%	200V±20%	230V±20%	350V±20%
Impluse sparkover voltage	100V/μs	≦500V				≦550V	≦650V
	1kV/μs	≦600V				≦650V	≦750V
Insulation resistance	DC50V	≧10,000MΩ			—		
	DC100V	—			≧10,000MΩ		
AC current durability	AC50Hz·5A·1s	10 times					
Impulse current durability	8/20μs·5kA	10 times					
Impulse life	10/1,000μs·100A	300 times					

Y05 series

Conforming standards

- RoHS compliant

Mass: 0.7 (g)

■Characteristics

Item	Conditions	Performance			
		Y05-90 [ ]	Y05-230 [ ]	Y05-350 [ ]	Y05-600 [ ]
DC sparkover voltage	100V/s	90V±20%	230V±20%	350V±20%	600V±20%
Impulse sparkover voltage	100V/μs	≦400V	—	≦650V	≦900V
	1kV/μs	≦500V	≦650V	≦750V	≦1,000V
Insulation resistance	DC50V	≧10,000MΩ	—		
	DC100V	—	≧10,000MΩ		—
	DC250V	—			≧10,000MΩ
Electrostatic capacity	1MHz	≦1.0pF			
DC holdover characteristics	DC52V	≦150ms			
AC discharge current	AC 5A, 1s	5times	10 times		
Impulse discharge current	8/20μs 5kA	+5, -5 times			—
	8/20μs 2.5kA	—			+5, -5 times
Impulse life	10/1,000μs 100A	300 times			

■External view

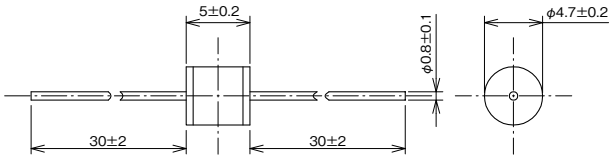

Y06S series
Y06SZ series

Conforming standards

●RoHS compliant

Mass: 0.7 (g)

■Characteristics

Item	Conditions	Performance			
		Y06S-90 [ ]	Y06S-100 [ ]	Y06SZ-230 [ ]	Y06SZ-350 [ ]
DC sparkover voltage	100V/s	90V±20%	100V±20%	230±50V	350±70V
Impulse sparkover voltage	1kV／μs	≦700V			≦800V
	10／200μs 20kV	≦1,000V			
Insulation resistance	DC50V	≧10,000MΩ		—	
	DC100V	—		≧10,000MΩ	
Electrostatic capacity	1MHz	≦1.0pF			
AC discharge current	AC 3A, 1s	1 time		—	
	AC 5A, 1s	—		10 times	
Impulse discharge current	8/20μs, 3kA	1 time		—	
	10/200μs, 2kA	+1, -1 time		—	
	8/20μs, 5kA	—		+5, -5 times	
Impulse life	10／200μs 100A	200 times		—	
	10／1000μs 100A	—		200 times	

■External view

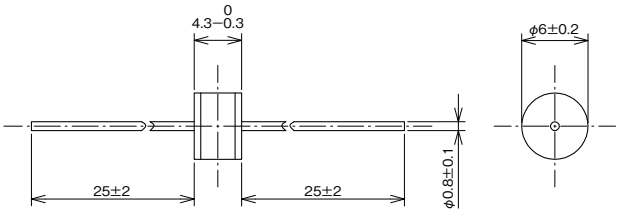

Y series

Conforming standards

●UL standard acquired (E328370)
●RoHS compliant

Mass: 1.5 (g)

■External view

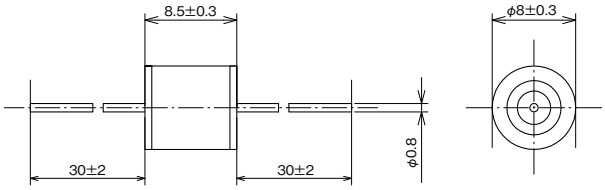

■Characteristics

Item	Conditions	Performance				
		Y-152[ ]	Y-212 [ ]	Y-302 [ ]	Y-402 [ ]	Y-602 [ ]
DC sparkover voltage	1kV/s	1,500V±300V	2,100V±400V	—		
	5kV/s	—		3,000V±600V	4,000V±800V	6,000V±1,200V
Impulse sparkover voltage	100V／μs	≦2,200V	—	≦4,000V	≦5,000V	≦8,000V
	10/200μs 3kV	—	≦3,000V	—		
Insulation resistance	DC500V	≧10,000MΩ		—		
	DC1000V	—		≧10,000MΩ		
Electrostatic capacity	1MHz	≦1.0pF				
AC discharge current	AC 1A, 1s	10 times	—	10 times		
Impulse discharge current	8/20μs, 3kA	+5, -5 times	—			
	8/20μs, 10kA	1 time	—	1 time	—	
	8/20μs, 1kA	—	2 times	+5, -5 times		
	8/20μs, 5kA	—			1 time	
Impulse life	10/1,000μs, 500A	10 times	—	10times		
	8/20μs, 100A	—	100 times	—		

Y08SV series

Conforming standards

- UL standard acquired (E328370)
- RoHS compliant

Mass: 1.5 (g)

■Characteristics

Item	Conditions	Performance	
		Y08SV-272 [ ]	Y08SV-312 [ ]
DC sparkover voltage	5kV/s	2,430 - 3,000V	2,850 - 3,500V
Impulse sparkover voltage	1kV／μs	≦3,900V	≦3,700V
Insulation resistance	DC1000V	≧100MΩ	
Electrostatic capacity	1MHz	≦1.0pF	
Impulse discharge current	8/20μs, 3kA	+10, -10 times	
Impulse life	8/20μs, 100A	300 times	

■External view

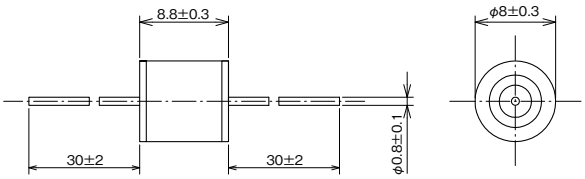

U series

Conforming standards

- UL standard acquired (E328370)
- RoHS compliant

Mass: 1.5 (g)

■External view

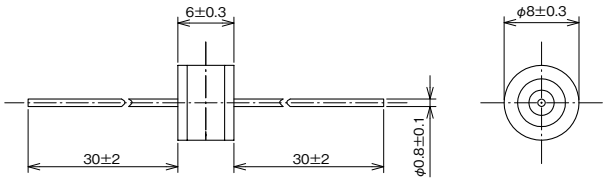

■Characteristics

Item	Conditions	Performance										
		U-1 [ ]	U-2 [ ]	U-3 [ ]	U-4 [ ]	U-5 [ ]	U-6 [ ]	U-7 [ ]	U-8 [ ]	U-9 [ ]	U-10 [ ]	U-11 [ ]
DC sparkover voltage	100V/s	75V±20%	90V±20%	145V±15%	230V±15%	250V±15%	300V±15%	350V±15%	400V±15%	470V±15%	600V±15%	800V±15%
Impulse sparkover voltage	100V/μs	≦500V			≦600V		≦700V				≦800V	≦1,000V
	10kV/μs	≦900V				≦1,000V					≦1,200V	≦1,500V
Insulation resistance	DC50V	≧10,000MΩ			—							
	DC100V	—			≧10,000MΩ					—		
	DC250V	—								≧10,000MΩ		
Electrostatic capacity	1MHz	≦1.0pF										
DC holdover characteristics	DC 52V	≦150ms		—								
	DC 80V	—		≦150ms	—							
	DC 135V	—			≦150ms		—					
	DC 150V	—					≦150ms					
AC discharge current	AC 10A, 1s	5 times				10 times						
Impulse discharge current	8/20μs, 5kA	10 times										
	8/20μs, 10kA	1 time										
Impulse life	10/1,000μs, 500A	300 times				500 times						

Y20 series

Conforming standards

●RoHS compliant

Features

●Best suited for lightning surge countermeasures for railway signal and other large capacity lines

Mass: 6.5 (g)

■External view

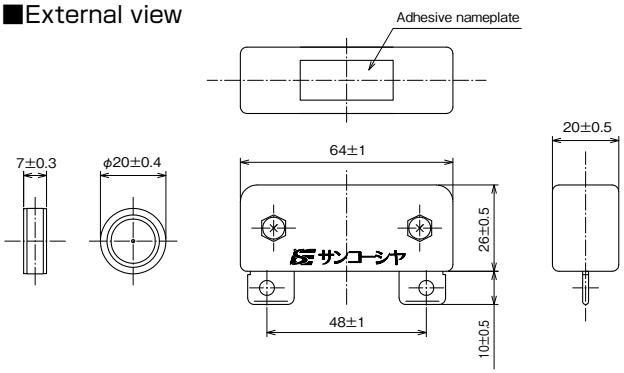

■Characteristics

Item	Conditions	Performance											
		Y20-90	Y20-230	Y20-250	Y20-350	Y20-490	Y20-610	Y20-700	Y20-800	Y20-1100	Y20-1200	Y20-1300	Y20-1600
DC sparkover voltage	100V/s	90V±20V	230V±40V	250V±50V	350V±60V	490V±70V	610V±90V	700V±100V	800V±120V	1,100V±220V	1,200V±200V	1,300V±200V	1,550V±150V
Impulse sparkover voltage	10/200μs, 3,000V	≦700V		≦750V		≦800V	≦1,000V	≦1,200V	≦1,400V	≦2,000V	≦2,200V	≦2,400V	≦2,200V
Insulation resistance	DC50V	≧10,000MΩ	—										
	DC100V	—	≧10,000MΩ			—							
	DC250V	—				≧10,000MΩ							—
	DC500V	—											≧10,000MΩ
Electrostatic capacity	1MHz	≦5.0pF								—			
AC discharge current	AC 50A, 0.1s	20 times											—
	AC 25A, 0.1s	—											20 times
	AC 100A, 1s	1 time				—	1 time				—		
Maximum impulse discharge current	8/20μs, 20kA	1 time								—		1 time	—
	10/200μs, 10kA	1 time									—	1 time	—
Impulse life	10/200μs, 500A	1,000 times				—	1,000 times				—	1,000 times	—
	10/200μs, 400A	—				1,000 times	—						

Y49 series

Conforming standards

●RoHS compliant

Features

●Large capacity arrester with maximum discharge current of 100kA
●Best suited for lightning surge countermeasures for railway signal, electrical power transmission and other large capacity lines

Mass: 300 (g)

■External view

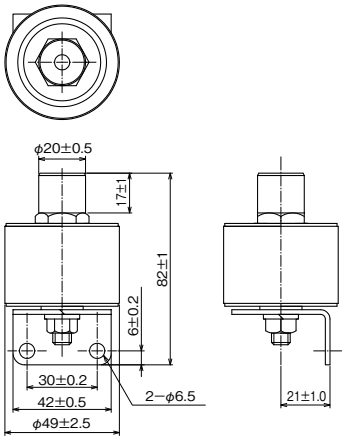

■Characteristics

Item	Conditions	Performance										
		Y49-230	Y49-350	Y49-450	Y49-550	Y49-700	Y49-930	Y49-1000	Y49-1200	Y49-1400	Y49-12kV	Y49-23kV
DC sparkover voltage	100V/s	230V±20%	350V±20%	450V±90V	550V±100V	—						
	500V/s	—				700V±100V	930V±90V	1,000V±150V	1,200V±200V	1,400V±150V	—	
	5kV/s	—									12kV±3kV	20~25kV
Impulse sparkover voltage	10/200μs 3kV	≦1,000V		≦1,500V		—			≦2,800V		—	
	1.2/50μs 30kV	—										≦30kV
Insulation resistance	DC100V	≧10,000MΩ		—								
	DC250V	—		≧1,000MΩ	≧100MΩ		—		≧100MΩ	—		
	DC500V	—					≧10,000MΩ		—	≧10,000MΩ	—	
	DC1000V	—									≧100MΩ	≧10,000MΩ
Electrostatic capacity	1MHz	≦10pF		—					≦10pF	—		
AC discharge current	AC 15A, 80s	30 times		—								
	AC 1,000A, 0.3s	—		30 times	—				10 times	—		
	AC 20A, 80s	—			30 times	—				20 times	—	
	AC 70A, 20s	—				20 times			—	20 times	—	
	AC 500A, 0.3s	—				10 times			—	10 times	—	
Impulse discharge current	8/20μs, 20kA	30 times		—								
	10/200μs, 20kA	—		30 times	—							
	8/20μs, 40kA	—									5 times	—
	8/20μs, 80kA	—										1 time

3SD4 series

Conforming standards

- UL standard acquired (E140906)
- RoHS compliant

Features

- Ultra compact surface mounted arrester

Mass: 0.6 (g)

■Characteristics

Item	Conditions	Performance				
		3SD4-75	3SD4-90	3SD4-145	3SD4-200	3SD4-230
DC sparkover voltage	100V/s	75V±20%	90V±20%	145V±20%	200V±20%	230V±20%
Impulse sparkover voltage	100V/μs	≦500V				≦550V
	1kV/μs	≦600V				≦650V
Insulation resistance	DC50V	≧10,000MΩ			—	
	DC100V	—			≧10,000MΩ	
Electrostatic capacity	1MHz	≦1.0pF				
DC holdover characteristics	DC 52V	≦150ms		—		
	DC 80V	—		≦150ms	—	
	DC 135V	—			≦150ms	
AC discharge current	AC 5A 2, 1s	1 time				
Impulse discharge current	8/20μs, 2.5kA×2	1 time				—
	8/20μs, 5kA×2	—				1 time
Impulse life	8/20μs, 100A×2	1,000 times				

■Recommended land pattern (Unit: mm)

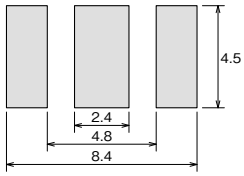

■External view

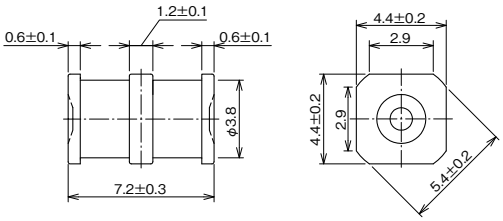

3Y06 series

Conforming standards

- UL standard acquired (E140906)
- RoHS compliant

Features

- With failsafe function

Mass: 1.3 (g)

■Characteristics

Item	Conditions	Performance		
		3Y06-90 [ ]	3Y06-230 [ ]	3Y06-350 [ ]
DC sparkover voltage	100V/s	90V±20%	230V±20%	350V±20%
Impulse sparkover voltage	1kV/μs	≦850V	≦700V	≦750V
Insulation resistance	DC50V	≧10,000MΩ	—	
	DC100V	—	≧10,000MΩ	
Electrostatic capacity	1MHz	≦3.0pF		
DC holdover characteristics	DC 52V	≦150ms	—	
	DC 135V	—	≦150ms	—
	DC 150V	—		≦150ms
AC discharge current	AC5A×2, 1s	5 times		
	AC10A×2, 1s	—		1 time
Impulse discharge current	8/20μs, 2.5kA×2	+5, -5 times	—	+5, -5 times
	8/20μs, 5kA×2	—	+5, -5 times	—
	8/20μs, 10kA×2	—		1 time
Impulse life	10/1000μs, 100A×2	100 times	300 times	100 times

■External view

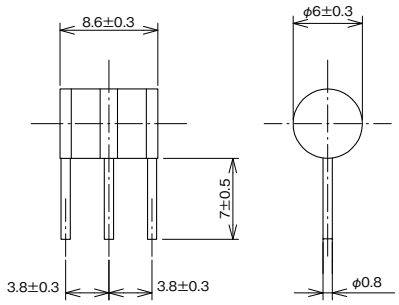

3YD-[ ]P1

Conforming standards

- UL standard acquired (E140906)
- RoHS compliant

Mass: 1.13 (g)

■Characteristics

Item	Conditions	Performance		
		3YD-90P1	3YD-230P1	3YD-350P1
DC sparkover voltage	100V/s	90V±20%	230V±20%	350V±20%
Impulse sparkover voltage	1kV/μs	≦600V	≦600V	≦700V
Insulation resistance	DC50V	≧10,000MΩ	—	—
	DC100V	—	≧10,000MΩ	
Electrostatic capacity	1MHz	≦3.0pF		
DC holdover characteristics	DC 52V	≦150ms		
AC discharge current	50Hz, 5A×2 1sec	—	10 times	
Impulse discharge current	8/20μs, 5kA×2	+5, -5 times		
	10/350μs, 2.5kA×2	2 times		
Impulse life	10/1000μs, 100A×2	—		100 times

■External view

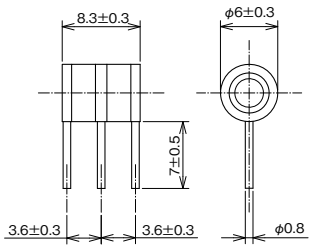

3J series

Conforming standards

- UL standard acquired (E140906)
- RoHS compliant

Features

- With failsafe function

Mass: 2.8 (g)

■Characteristics

Item	Conditions	Performance						
		3J-1 [ ]	3J-2 [ ]	3J-3 [ ]	3J-4 [ ]	3J-5 [ ]	3J-6 [ ]	3J-7 [ ]
DC sparkover voltage	100V/s	90V±20%	145V±20%	230V±20%	250V±20%	300V±20%	350V±20%	400V±20%
Impulse sparkover voltage	100V/μs	≦700V		≦500V		≦600V		≦700V
	1kV/μs	≦850V		≦650V		≦750V		≦850V
Insulation resistance	DC50V	≧10,000MΩ		—				
	DC100V	—		≧10,000MΩ				
Electrostatic capacity	1MHz (L-L)	≦1.5pF						
	1MHz (L-E)	≦3.0pF						
DC holdover characteristics	DC 52V	≦150ms		—				
	DC 135V	—		≦150ms			—	
	DC 150V	—					≦150ms	
AC discharge current	AC 5A×2, 1s	10 times						
	AC 10A×2, 1s	1 time						
Impulse discharge current	8/20us, 5kA×2	+5, -5 times						
	8/20us, 10kA×2	1 time						
Impulse life	10/1000μs, 200A×2	300 times						

■External view

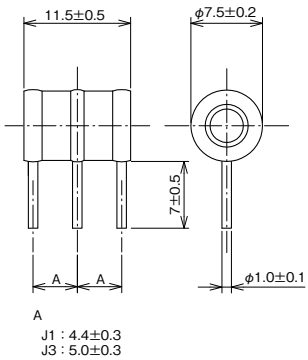

3H series

Conforming standards

- UL standard acquired (E140906)
- RoHS compliant

Features

- With failsafe function

Mass: 2.6 (g)

■Characteristics

Item	Conditions	Performance						
		3H-90 [ ]	3H-150 [ ]	3H-230 [ ]	3H-250 [ ]	3H-350 [ ]	3H-420 [ ]	3H-500 [ ]
DC sparkover voltage	100V/s	90V± 20%	150V± 20%	230V± 20%	250V± 20%	350V± 20%	420V± 20%	500V± 20%
Impulse sparkover voltage	1kV/μs	≦500V	≦600	≦700V	≦900V		≦1,000V	
Insulation resistance	DC50V	≧10,000MΩ		—				
	DC100V	—		≧10,000MΩ				
Electrostatic capacity	1MHz	≦3.0pF						
DC holdover characteristics	DC 52V	≦150ms		—				
	DC 80V	—				≦150ms	—	
	DC 135V	—		≦150ms		—	≦150ms	
AC discharge current	AC5A×2, 1s	10 times				—	10 times	
	AC10A×2, 1s	—				5 times	—	
Impulse discharge current	8/20us, 5kA×2	+5, -5 times				—	+5, -5 times	
	8/20us, 10kA×2	—				+5, -5 times	—	
Impulse life	10/1000μs, 100A×2	300 times						

■External view

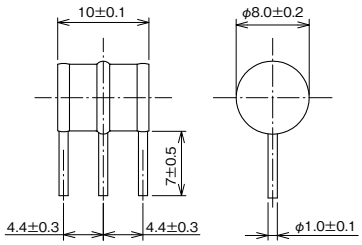

Lightning protective elements SSPD
(Solid-State Surge Protection Device)

Fast response speed semiconductor surge protective elements used for surge protection of electronic devices and circuits

SSPD
(Solid-State Surge Protection Device)

Conforming standards
- UL standard acquired (E140906)
- RoHS compliant

Features
- A single protective element provides the same protection level (3-electrode construction) across lines and to earth (L1-E, L2-E, L1-L2).
- Protection with high speed response of ns (nanosecond: 10^{-9} sec.) order.
- Excellent dv/dt characteristics

Mass: 0.9 (g)

■3-electrode structure for optimal protection for communication lines

This is a three terminal device that is capable of providing effective surge protection with a single device.
With generally available 2-electrode elements, as illustrated in Fig. 2, three elements are needed to protect the lines, earths and across lines. However, SSPD can provide L1-E, L2-E, L1-L2 with the same level of protection with just a single element. (See Fig. 1)
This is a compact device that can provide line protection.

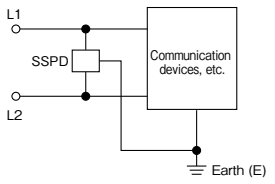

Fig. 1 Lightning surge protection by SSPD

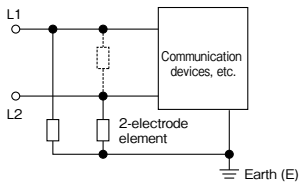

Fig. 2 Protection using 2-electrode elements

■External view

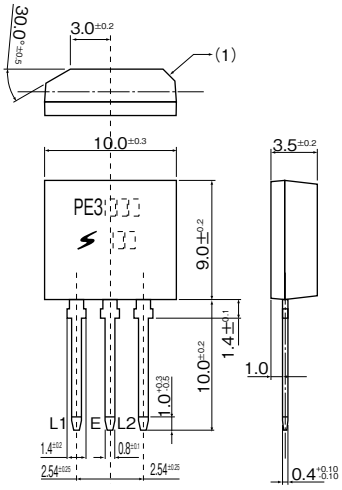

■Model identification

PE3 □□ □ F

- F: RoHS compliant
- □: Shows surge current waveform 10/1000μs current withstand capacity
  - A : 200(A)
  - B : 150(A)
- □□: Specifies operating voltage when 100V/ms rise speed voltage is applied to this device
  - 24 : 200~270(V)
  - 15 : 125~195(V)
  - 10 : 85~120(V)
  - 07 : 60~110(V)
  - 05 : 40~ 75(V)

■Characteristics

Item	Conditions		Performance									
			PE305AF	PE307AF	PE310AF	PE315AF	PE324AF	PE305BF	PE307BF	PE310BF	PE315BF	PE324BF
Impulse discharge current	10/1000μs		200A					150A				
	10/200μs		400A					300A				
	8/20μs		800A					500A				
Standoff voltage			30V	50V	65V	120V	180V	30V	50V	65V	120V	180V
Breakdown voltage	100V/ms	MIN	40V	60V	85V	125V	200V	40V	60V	85V	125V	200V
	100V/ms	MAX	75V	110V	120V	195V	270V	75V	110V	120V	195V	270V
Impulse control voltage	100V/μs		≦90V	≦130V		≦220V	≦300V	≦90V	≦130V		≦220V	≦300V
Off-leak current			≦10μA									
DC holdover characteristics			≧150mA									
Electrostatic capacity	1MHz 1Vrms (DC30V)		≦150pF	—				≦100pF	—			
	1MHz 1Vrms (DC50V)		—	≦150pF				—	100pF			

Fast response speed semiconductor surge protective elements used for surge protection of electronic devices and circuits

SP diode

Conforming standards

●RoHS compliant

Features

●These are bipolar elements that can be fitted into any circuit, regardless of polarity.
●Protection with high speed response of ns (nanosecond: 10^{-9} sec.) order.
●Improved surge withstand capacity and low current leakage. Wide range of application.

Mass: 0.7 (g)

■Voltage/ current characteristics

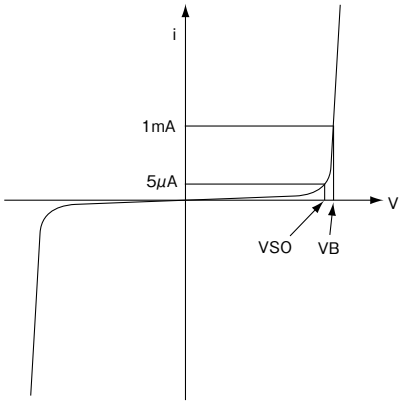

■External view

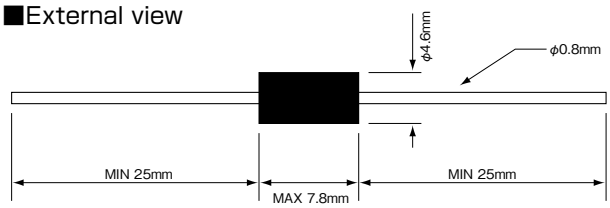

■Characteristics

Item	Conditions		Performance			
			B1.5E010	B1.5E016	B1.5E027	B2.8E036
Standoff voltage	—	MIN.	8.5V	12.5V	21.5V	29.0V
Maximum permissible power	For 10/1000μs	MIN.	1,500W			2,800W
Maximum allowed current	For 10/1000μs	MIN.	100A	68A	38A	56A
Clamp voltage	For Ipp	MIN.	—			
		TYP.	—			
		MAX.	15.0V	22.5V	38.0V	50.0V
Breakdown voltage	For 1mA	MIN.	9.0V	13.5V	23.5V	31.5V
		TYP.	10.0V	15.5V	27.0V	36.0V
		MAX.	11.0V	17.0V	30.0V	40.0V
Leak current	For Vso	MIN.	—			
		TYP.	—			
		MAX.	50μA	5μA		
Electrostatic capacity	For 100kHz	MIN.	—			
		TYP.	3,900pF	2,500pF	1,400pF	1,600pF
		MAX.	—			
Vb temperature coefficient		MIN.	—			
		TYP.	0.06%/℃	0.10%/℃	0.08%/℃	0.06%/℃
		MAX.	—			

AV-11
AV-13
AV-14

Conforming standards

- UL standard acquired (E328370)
- RoHS compliant

Features

- Protection of low voltage power supply circuits of AC125V, 240V, 440V or less
- Compact element type allows for space-saving installation.

■Characteristics

Item	Performance		
	AV-11	AV-13	AV-14
Rated circuit voltage	AC125V	AC240V	AC440V
Impulse sparkover voltage	800V or less	1.2kV or less	2kV or less
	(10/200μs, 3kV applied)		
Impulse discharge current	4.5kA (8/20μs), 1 time		
Dimensions (mm)	W16×D12×H50	W16×D13×H50	W16×D16×H50
Mass (g)	4	5	6

■External view

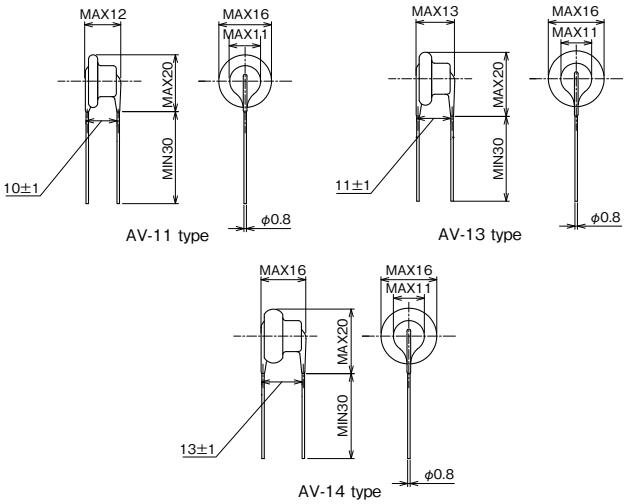

AV3P-1
AV3P-2

Conforming standards

- UL standard acquired (E328370)
- RoHS compliant

Applications

- Protection of low voltage power supply circuits of AC125V, 240V or less
- Compact element type allows for space-saving installation.
- 3-electrode configuration means that a single device can cover a single-phase two-wire type line.

■Characteristics

Item	Performance	
	AV3P-1	AV3P-2
Rated circuit voltage	AC125V	AC240V
Impulse sparkover voltage	800V or less	1.2kV or less
	(10/200μs, 3kV applied)	
Impulse discharge current	9kA (8/20μs), 1 time	
Dimensions (mm)	W16×D20×H37	W16×D23×H37
Mass (g)	8	10

■External view

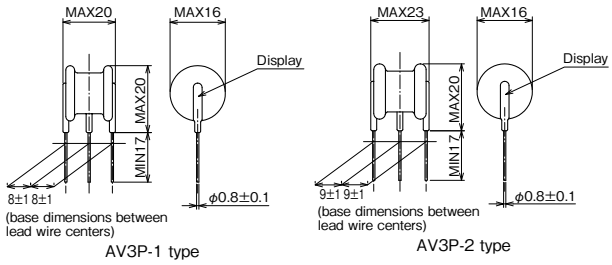

Lightning transformers

Lightning surge conversion rate less than 1/1000 high performance lightning transformers

ST

Lightning transformers are used for surge protection of power supplies for low voltage power distribution equipment such as in equipment rooms, radio relay stations, mobile telephone base stations, etc.
The unit comprises a static electricity shielded high withstand voltage insulation transformer (protecting the earth) and a power supply SPD (protect between devices and the earth), proving effective shutout against induced lightning surge and earth potential rise.

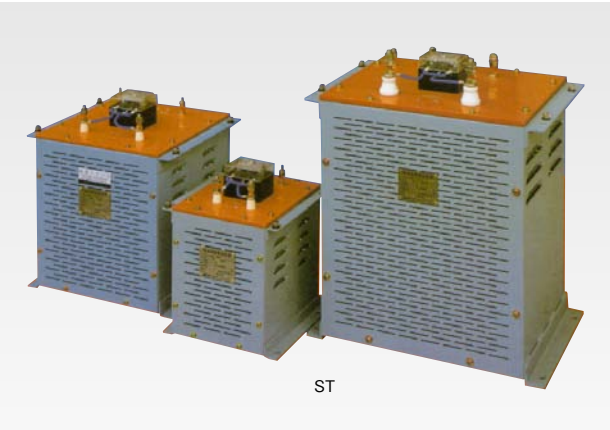

■Circuit diagram

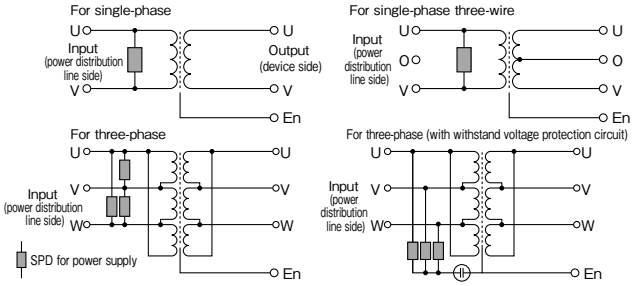

■Model identification

□ ST □ – □□□ □ □ □ □

Connection type	
Symbol	Type
1	Single-phase
3	Three-phase
4	Reverse V
5	Scott

AC withstand voltage		
Symbol	Primary	Secondary
1	10kV	3kV
2	3kV	10kV
3	3kV	3kV
4	10kV	10kV
5	15kV	3kV

Capacity			
Symbol	Capacity	Symbol	Capacity
501	500VA	153	15kVA
102	1kVA	203	20kVA
202	2kVA	253	25kVA
302	3kVA	303	30kVA
402	4kVA	353	35kVA
502	5kVA	503	50kVA
752	7.5kVA	753	75kVA
103	10kVA		

Input side Rated voltage	
Symbol	Voltage
1	100V
2	200V
4	400V
5	200V Single-phase three-wire (with center open terminal)
6	100/200V Single-phase three-wire (with neutral point terminal)

Output side Rated voltage	
Symbol	Voltage
1	100V
2	200V
4	400V
7	100/200V Single-phase three-wire

Other functions	
Symbol	Function
S	RP-200 type with SPD
R	S100, S200, S400−S type with SPD
G	with withstand voltage protection circuit (in combination with S type SPD)
P	with withstand voltage protection circuit (in combination with RP-200 type SPD)

Color	
Symbol	Color
1	7.5BG 6/1.5 Semi-gloss
2	7.5BG 6/1.5 Gloss
3	7.5BG 7/1.5 Semi-gloss
4	5Y 7/1 Semi-gloss
5	2Y 7.5/1 Semi-gloss
6	N 7 Semi-gloss
7	2.5B 6/3 Semi-gloss

■Characteristics

Item			Performance				Remarks
Input/output voltage			AC100V, AC200V, AC400V, AC100/200V				
Connection type (No. of phases)			Single-phase (two-wire,three-wire), three-phase three-wire (delta connection)				
Capacity	Single-phase		0.5-30kVA				Note 1
	Three-phase		1-75kVA				
Operating frequency			50Hz/60Hz				
Insulation resistance			100MΩ or more at DC500V				
Withstand voltage (*)	Input to output		AC10kV (for 1 minute) Impulse (1.2/50μs) 30kV				
	Input to earth						
	Output to earth		AC3kV (for 1 minute)				
Voltage fluctuation rate and efficiency	Single-phase	Capacity	0.5kVA or less	1-2kVA	3kVA	5kVA or more	
		Voltage fluctuation rate	5% or less	4% or less	3% or less		
		Efficiency	93% or more		95% or more		
	Three-phase	Capacity	7.5kVA or less		10kVA or more		
		Voltage fluctuation rate	3% or less		2% or less		
		Efficiency	95% or more		97% or more		
Insulation class		Single-phase	Class A 2kVA or less, Class B 3kVA or more				Note 2
		Three-phase	Class A 60kVA or less, Class B 75kVA or more				
Limit of temperature rise		Class A	55℃ or less				Resistance method with ambient temperature 40℃
		Class B	75℃ or less				
Lightning surge conversion rate			1/1000 or less				

Note 1: Products can be manufactured with other capacity besides standard one.
Note 2: Products can also be manufactured with insulation type H.
* Example of AC withstand voltage symbol 1.

■Dimensions - mass (For single-phase)

Capacity (kVA)	Dimensions (mm) A	B	a	b	H	H_0	D	Mass (kg)
0.5	200	200	150	185	200	70	8.5	13
1	200	250	150	230	200	70	8.5	18
2	240	290	150	270	260	70	8.5	31
3	240	290	150	270	260	70	8.5	35
5	260	380	200	360	380	90	10.5	47
7.5	260	380	200	360	380	90	10.5	65
10	320	400	250	380	420	100	10.5	96
15	320	400	250	380	420	100	10.5	120
20	400	500	300	470	420	110	12.5	160
25	400	500	300	470	500	110	12.5	177
30	400	500	300	470	500	150	12.5	200

Dimensions of the non-standard type may differ from these.

■Dimensions - mass (For three-phase)

Capacity (kVA)	Dimensions (mm) A	B	a	b	H	H_1	H_2	D	Mass (kg)
1	350	480	250	440	350	90	45	12	45
2	350	480	250	440	350	90	45	12	55
3	350	480	250	440	350	90	45	12	65
4	400	580	300	540	400	90	45	12	80
5	400	580	300	540	400	90	45	12	90
7.5	400	630	300	590	470	100	50	12	135
10	400	630	300	590	470	100	50	12	155
15	400	630	300	590	540	100	50	12	195
20	400	630	300	590	540	100	50	12	220
25	460	740	300	690	620	110	55	16	300
30	460	740	300	690	620	110	55	16	325
35	500	830	300	780	690	110	55	16	370
50	500	830	300	780	690	110	55	16	430
75	580	910	400	850	720	150	55	19	580

Dimensions of the non-standard type may differ from these.

■External view

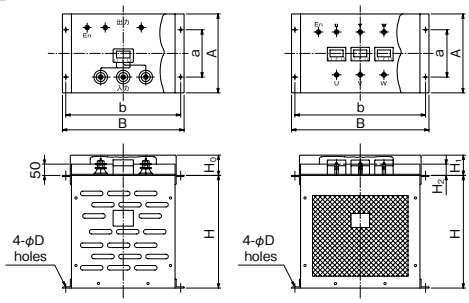

Lightning transformers

Lightning surge conversion rate less than 1/1000 high performance lightning transformers

STC (cabinet type)

Lightning transformers are used for surge protection of power supplies for low voltage power distribution equipment such as in equipment rooms, radio relay stations, mobile telephone base stations, etc.
The unit comprises a static electricity shielded high withstand voltage insulation transformer (protecting the earth) and a power supply SPD (protect between devices and the earth), proving effective shutout against induced lightning surge and earth potential rise.


STC

■Circuit diagram

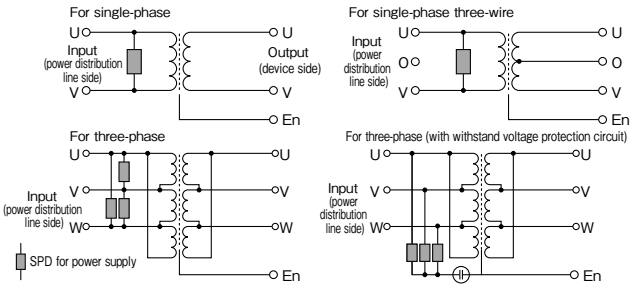

■Model identification

□ STC □ – □□□ □ □ □ □

Connection type	
Symbol	Type
1	Single-phase
3	Three-phase
4	Reverse V
5	Scott

AC withstand voltage		
Symbol	Primary	Secondary
1	10kV	3kV
2	3kV	10kV
3	3kV	3kV
4	10kV	10kV
5	15kV	3kV

Capacity			
Symbol	Capacity	Symbol	Capacity
501	500VA	153	15kVA
102	1kVA	203	20kVA
202	2kVA	253	25kVA
302	3kVA	303	30kVA
402	4kVA	353	35kVA
502	5kVA	503	50kVA
752	7.5kVA	753	75kVA
103	10kVA		

Input side Rated voltage	
Symbol	Voltage
1	100V
2	200V
4	400V
5	200V Single-phase three-wire (with center open terminal)
6	100/200V Single-phase three-wire (with neutral point terminal)

Output side Rated voltage	
Symbol	Voltage
1	100V
2	200V
4	400V
7	100/200V Single-phase three-wire

Other functions	
Symbol	Function
S	RP-200 type with SPD
R	S100, S200, S400−S type with SPD
G	with withstand voltage protection circuit (in combination with S type SPD)
P	with withstand voltage protection circuit (in combination with RP-200 type SPD)

Color	
Symbol	Color
1	7.5BG 6/1.5 Semi-gloss
2	7.5BG 6/1.5 Gloss
3	7.5BG 7/1.5 Semi-gloss
4	5Y 7/1 Semi-gloss
5	2Y 7.5/1 Semi-gloss
6	N 7 Semi-gloss
7	2.5B 6/3 Semi-gloss

■Characteristics

Item			Performance			Remarks
Input/output voltage			AC100V, AC200V, AC400V, AC100/200V			
Connection type (No. of phases)			Single-phase (two-wire,three-wire), three-phase three-wire (delta connection)			
Capacity	Single-phase		0.5-30kVA			Note 1
	Three-phase		5-100kVA			
Operating frequency			50Hz/60Hz			
Insulation resistance			100MΩ or more at DC500V			
Withstand voltage (*)	Input to output		AC10kV (for 1 minute) Impulse (1.2/50μs) 30kV			
	Input to earth					
	Output to earth		AC3kV (for 1 minute)			
Voltage fluctuation rate and efficiency	Single-phase	Capacity	1kVA or less	2kVA	3kVA or more	
		Voltage fluctuation rate	5% or less	4% or less	3% or less	
		Efficiency	93% or more		95% or more	
	Three-phase	Capacity	7.5kVA or less	10-30kVA	40kVA or more	
		Voltage fluctuation rate	4% or less	3% or less	3% or less	
		Efficiency	94% or more	95% or more	96% or more	
Insulation class		Single-phase	Class B			Note 2
		Three-phase	Class B			
Limit of temperature rise			75℃ or less			Resistance method with ambient temperature 40℃
Lightning surge conversion rate			1/1000 or less			

Note 1: Products can be manufactured with other capacity besides standard one.
Note 2: Products can also be manufactured with insulation type H.
* Example of AC withstand voltage symbol 1.

■Dimensions - mass (For single-phase)

Capacity (kVA)	Dimensions (mm) H	W	D	A	B	Mass (kg)
0.5	400	300	300	260	260	30
1.0	400	300	300	260	260	50
2.0	450	350	400	360	310	60
3.0	450	350	400	360	310	70
5.0	650	500	500	400	460	130
7.5	650	500	500	400	460	150
10.0	800	550	550	450	500	175
15.0	800	550	550	450	500	200
20.0	800	550	550	450	500	250
25.0	900	650	600	500	600	280
30.0	900	650	600	500	600	300

Dimensions of the non-standard type may differ from these.

■Dimensions - mass (For three-phase)

Capacity (kVA)	Dimensions (mm) H	W	D	A	B	Mass (kg)
5	600	550	450	350	500	105
7.5	600	550	450	350	500	140
10	800	600	450	350	550	165
15	800	600	450	350	550	195
20	800	600	450	350	550	240
30	900	700	500	400	650	305
40	900	700	500	400	650	385
50	900	700	500	400	650	425
75	1,000	800	600	500	750	540
100	1,000	800	600	500	750	630

Dimensions of the non-standard type may differ from these.

■External view

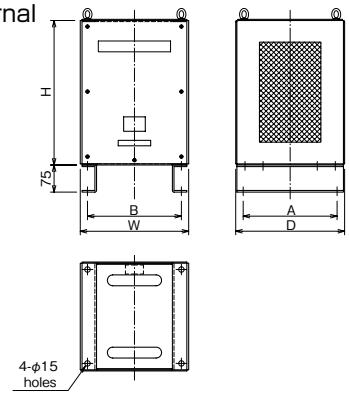

Earthing technology

What is earthing?

Earthing is the electrical connection of machinery and equipment to the ground, via a conductor.
Equipment that is normally earthed would include various kinds of electrical appliances (for power supply, communications, signaling, wireless, etc.), lightning protection equipment (lightning rods, overhead ground wires, etc.) , and electric protection equipment, etc.
In order to earth something, electrical terminals need to be connected to the ground. Earth electrodes perform the role of electrical terminals, and a variety of earth electrodes can be installed, depending on economical and constructional situations.

Purpose of earthing

Earthing plays a very important role of protecting human operators against electric shock in the event of a lightning strike or malfunction of electrical equipment, and also protects the equipment against insulation breakdown.

1	2	3	4	5	6
Prevention of electric shock and fire due to leak current	Suppression of abnormal voltage	Prevention of electrostatic damage	Prevention of damage to communi-cations	Prevention of fire and damage due to lightning	Reliable operation of protection relay apparatus

Types and features of earthing installation

When starting earthing installation, it is necessary to plan carefully what kind of earth electrodes will need to be used in order to secure the required earth resistance. Each site will have its own restrictions due to the topography, area and buildings and structures, etc., and consideration also needs to be given to future construction plans. The table below shows some of the typical earthing installation methods that are currently in use, and describes the special features of each.

■ Representative earthing installation methods and their features

Type and classification of electrodes		Installation method	Features		
			Working area	Durability	Economy
Rod electrode	Rod insertion method	A simple method of inserting connected earthing rods into the ground.	Restricted	Good	Excellent
	Boring method	Method of inserting electrodes and conductive materials into bored holes.	Restricted	Excellent	Acceptable
Plate electrode	Earthing plate	Metal plates (90×90) are laid in the ground, horizontally or vertically.	Medium	Excellent	Good
	Conductive concrete strip electrode	SAN-EARTH conductive concrete is laid around the lead wires.	Medium	Excellent	Excellent
	SAN-FLEX wiring installation	Strip electrodes are installed in a combination of SAN-FLEX conductive coated wire and SAN-EARTH.	Medium	Especially excellent	Excellent
Buried earth		Bare wires are laid to a shallow depth.	Medium	Good	Good
Mesh earthing		Buried earth wires are laid in a mesh format to a shallow depth.	Large	Good	Good
Earth resistance reducing method	Conductive reducing material	Conductive materials are laid around buried earth or other earth electrodes.	Medium	Excellent	Good
	Electrolytic reducing material	Electrolytic solution (soil conditioner) is injected into the ground around the earth electrodes. Care needs to be taken with regard to the effect on humans, livestock and plants, etc.	Medium	Acceptable	Good

Special features of SAN-EARTH Earthing Enhancing Compound

SAN-EARTH is a non-polluting earthing product whose main components are special carbon particles and cement. Moreover, because it is a good conductor, it provides stable and permanent earthing.

Excellent earthing effects

Because of its powdery, granular composition, SAN-EARTH is easily assimilated into soil and makes contact with the ground over a large effective area. SAN-EARTH delivers an excellent earthing effect that is not possible with conventional earth enhancing materials.

Simple and economic installation

In principle, M5C does not require water when being installed. Because roots and protruding rocks do not interfere with the installation, significant labor savings can be achieved. Also, the material can be freely installed on sloped sites and is ideally suited to all manner of earthing installation.

Corrosion prevention effect

There are many different causes of soil corrosion, but earth wires set in SANEARTH do not suffer from corrosion, in comparison with wires simply laid in the soil.

Non-pollution

SAN - EARTH is a very stable substance that does not leach into the ground or alter due to electrolysis, thus it provides non-polluting earthing.

SAN-EARTH types and applications

SAN-EARTH is available in three types, M1C, M5C, and B5C. The main applications and methods of installation of each type are as described below.

Type	Applications	Installation methods	Amount per bag
M1C	Pasting	Mixed with water into a paste consistency, then mortared onto concrete or bedrock, etc.	25kg
M5C	Scattering	Scattered in powder form.	25kg
B5C	Boring	Mixed with water into a liquid consistency and then injected by pump.	25kg

Earthing installation work using SAN-EARTH

SAN-EARTH (M5C) strip installation work

SAN-EARTH (M5C) absorbs the moisture in the surrounding soil and hardens naturally, making it ideal for installation in locations where it would be difficult to transport water.
Examples of how SAN-EARTH (M5C) is used in construction work are shown below.

■ Basic construction method

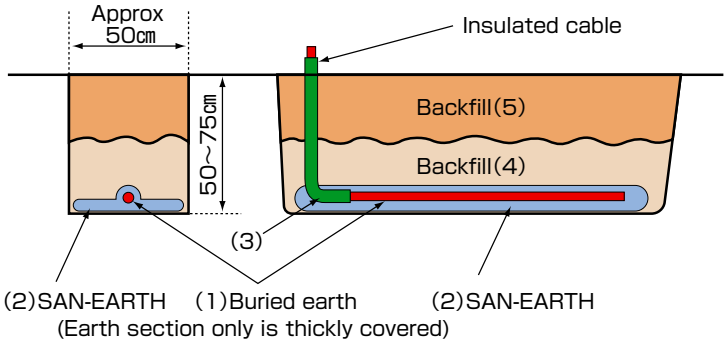

(1) Lay earth wires.
(2) Scatter SAN-EARTH so that the earth wires are completely covered.
(Thickly around the earth wires, thinly at other locations)
(3) About 30cm of the covered part of the rising section of the earth wire is also embedded in SAN-EARTH.
(4) Carefully backfill with soil to a depth of around 10cm and tread down to compact it.
(5) Completely backfill with soil.

Note: If the earth wires are not completely covered with SAN-EARTH, they may corrode due to electropotential difference and the effect of electrolytic corrosion prevention will be lost.

■ Example of laying SAN-EARTH M5C

Laying SAN-EARTH M5C *One 25kg bag of M5C will cover approx. 3 meters (width 50cm) .

Earth grounding materials

SAN-EARTH (M1C) conductive concrete installation work

This is a simple installation method where the earth wires are laid in a trench around the outside of the foundations of a building or structure, and SAN-EARTH conductive concrete is installed so that the wires are covered. The basic installation method of SAN-EARTH M1C is shown in the illustrations below.

■ Basic construction method 1

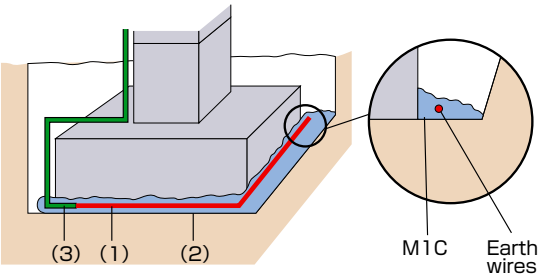

(1) Earth wires are laid in a trench around the outside of the foundations.

(2) SAN-EARTH conductive concrete is installed so that the wires are completely covered. SAN-EARTH M1C (25kg) is blended with approx. 7 liters of water.

(3) About 30cm of the covered part of the rising section of the earth wire is also embedded in the conductive concrete.

■ Basic construction method 2

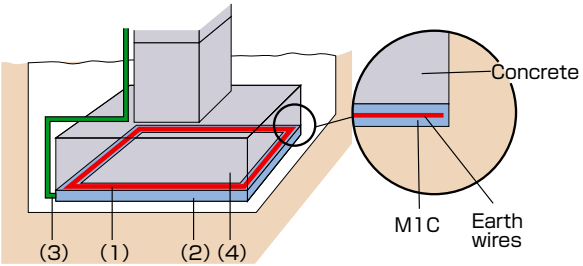

(1) The earth wire is laid inside the foundations.

(2) SAN-EARTH conductive concrete is installed so that the wires are completely covered. SAN-EARTH M1C (25kg) is blended with approx. 7 liters of water.

(3) About 30cm of the covered part of the rising section of the earth wire is also embedded in the conductive concrete.

(4) When the SAN-EARTH mortar is dry, the next step of the process is to lay the foundation concrete.

■ Example of laying SAN-EARTH conductive concrete M1C

Laying SAN-EARTH M1C *One 25kg bag of M1C will cover approx. 3 meters (width 30cm)

Deep-buried earthing method (boring method)

For locations where it is difficult to secure ground for earthing, such as power generation stations or substations, etc., the deep-buried earthing method (boring method), which uses the deep underground, is very effective. In the deep-buried earthing method, boring machines drill holes between 5 to 15cm diameter into the ground and electrodes are inserted into the holes. Compared with other installation methods, this method is able to achieve excellent earth resistance with relatively little work.
In Sankosha's Deep-buried earthing method there are the SAN-EARTH method and the SAN-FLEX method, depending on the earth electrode that is put in the ground.

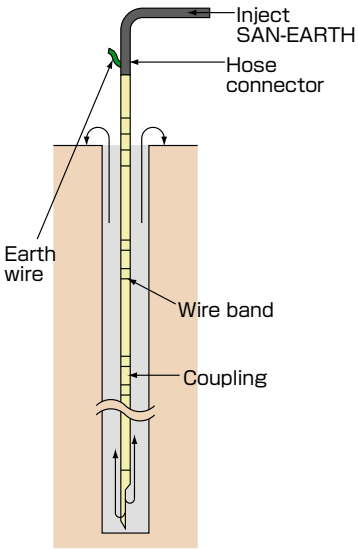

■ SAN-EARTH deep-buried earthing

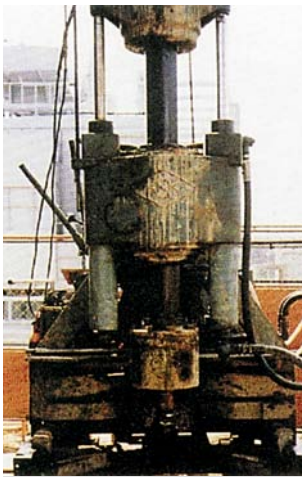

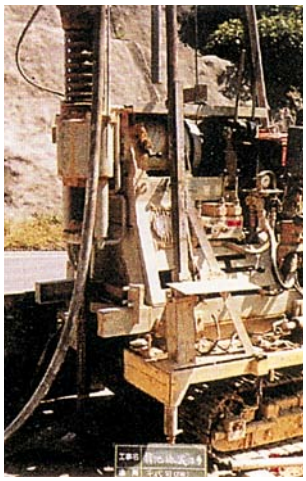

SAN-FLEX wire installation method

The SAN-FLEX wire installation uses SAN-FLEX wire (conductive coated wire) that enables long lasting earthing work in severe environments, such as railway tracks where direct current flows into the ground, or in coastal areas where there are tides, etc.

Features

- Long life
- Excellent anticorrosion
- Patent product

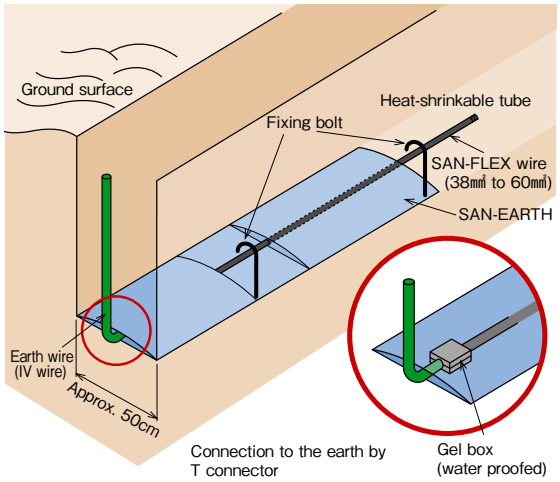

Connection of straight line section

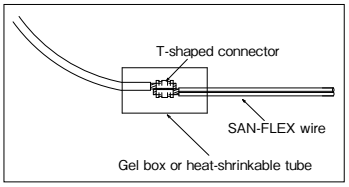

Connection of split section

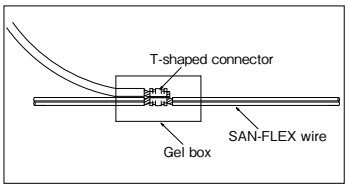

Spiral earth method

In spiral earth method, SAN-FLEX wire (conductive coated wire) is wrapped around a concrete pillar and it obtains the low earth resistance from the iron bars inside the concrete pillars. This method is suited for concrete pillars to achieve 100 Ω resistance.

Features

- New construction and grounding construction in one time
- Execellent site utilization ratio
- Execellent corrosion protection
- Patent product

■ Installation example

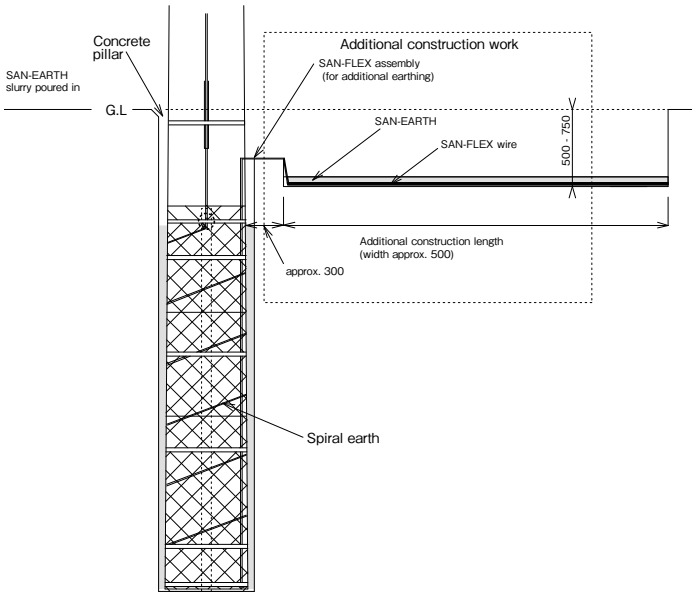

SAN-EARTH underwater electrodes

SAN-EARTH underwater electrodes use titanium for the electrodes and the conductive portion from underwater, and the earth electrodes are covered in the conductive concrete SAN-EARTH to form a single earthing unit. They come to the fore in obtaining earth resistance on cliffs where lighthouses are built and on sea-going facilities, etc.

Features

- Electrode for sea
- Patent product

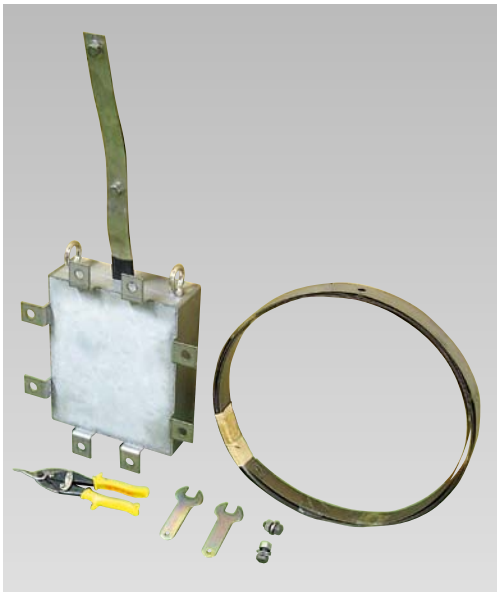

■ Installation examples

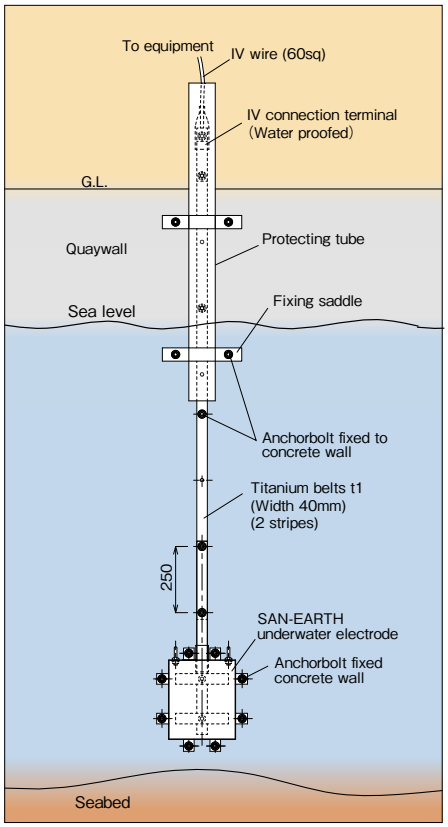

SAN-FLEX kit method

The SAN-FLEX kit earthing installation method involves a combination of SAN-FLEX wire (conductive coated wire) covered with carbon breeze and San-mat that enables long lasting earthing work in severe environments, such as railway tracks where direct current flows into the ground, or in coastal areas where there are tides, or mountain installations where it is difficult to bring in materials.

Features

- Excellent anticorrosion
- Easy installation
- Patent product

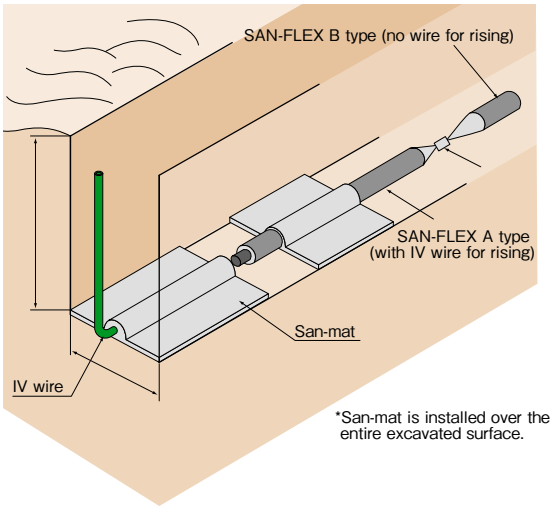

The SAN-FLEX kit is available in A type, with connected IV wire's rising section, and B type for connection. (Photograph shows A type.)

Feathered earth

With a feathered earth, vanes spread out on either side of a metal strip, it steadily reduces earth resistance and surge impedance. The pointed tips of the vanes promote the smooth discharge of electricity into the soil. They are particularly effective in reducing surge impedance from power transmission towers and in earthing wind power facilities.

Features

- Making surge impedence lower
- Corrosion protection
- Patent product

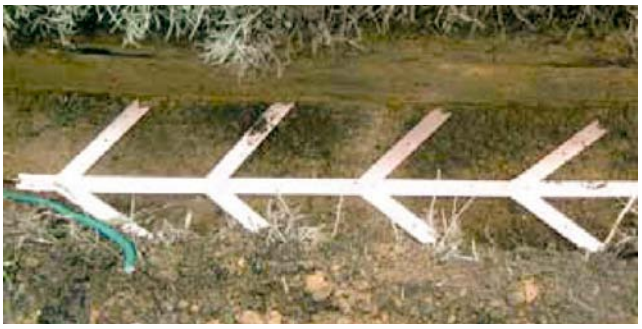

Direct strike protection systems

Lightning protection system 500

Lightning protection system 500 provides highly effective protection against equipment damage due to direct lightning strikes on wireless relay stations and wireless base stations, and against lightning reflux current caused by direct lightning strikes. It is a direct strike protection system whereby insulators are used to isolate lightning rods and other air terminating sections from towers and buildings, lightning current is conducted downwards by highly insulated lightning cables (Sankosha product), and lightning current caused by direct lightning strikes is diverted through earths bored deep into the ground and discharged away from the surface.

Highly insulated lightning cable

Integrated lightning rod

For fall prevention

Features

- High-insulation, High-voltage
- Restrains rise of grounding potention
- Patent product

■ Installation example

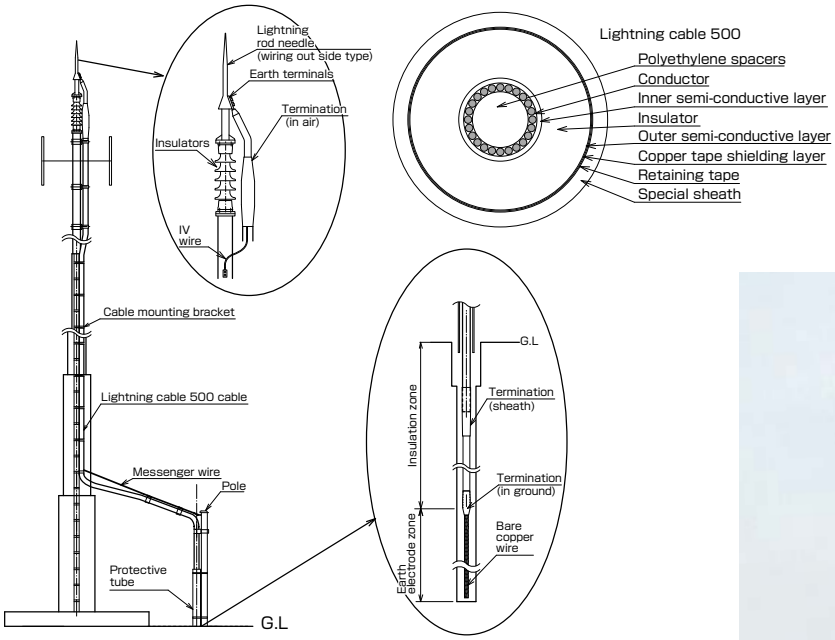

Surge counter

SCAR11X

Counts surge current 10/200μs, more than 10A flowing on earth circuit.

■Characteristics

Item	Performance
Measurement method	Current detection by CT
Detection current value	Impluse 10/200μs, 10A or more
Display	Count displayed by electronic counter
Power	Lithium battery for electronic counter (battery life 5 years or more)

SCAR11X

Dimensions: W65×D108.5×H35 (mm) (Except projecting part of through terminal)
CT through hole φ8

SCAR11Y

Counts surge current 10/200μs, more than 10A flowing on earth circuit. SCAR11Y has output contact.

■Characteristics

Item	Performance
Measurement method	Current detection by CT
Detection current value	Impluse 10/200μs, 10A or more
Display	Count displayed by electronic counter
Contact output	1 make 70ms
Operation confirmation function for counter	Confirmation counter and LED display
Power	Lithium battery for electronic counter (battery life 5 years or more) R6 (AA) size battery for display output (battery life depends on operation condition)


SCAR11Y

Dimensions: W95×D173×H60 (mm) (Except projecting part of through terminal)
CT through hole φ8

SCAR11DL-1

Detects lightning surge current flowing on earth line by lightning strike and records day and time. When errors or failures occur in facility, it can decide whether lightning causes.

■Characteristics

Item	Performance
Measurement method	Current detection by CT
Detection current value	Impluse 10/200μs, 10A (±20%) or more

Item	Performance	Remark
Interclock	Auto set by PC time	Data setting
Minimum recording interval	1 time/ second	
Time accuracy	±1minute / month (about 20℃)	
Record score	16,000	EEPROM (Non-volatile)
Built-in battery	CR-2032	1 year life (exchangable)
Data setting and recording	PC original software	PC original software (accesary)
Communivation	USB	USB special cable (accesary)


SCAR11DL-1/WP2

Dimensions: W123×D101×H217 (mm)
CT through hole φ30

■Product type identification

SCAR11DL–1/ □ □

- 1 : L=1000mm±10%
- 2 : L=2000mm±10%
- 3 : L=3000mm±10%
- 4 : L=4000mm±10%

- None : Indoor
- WP : Outdoor

Simple type Lightning surge current detection device Surge print B

Lightning surge current trace flowing in a line (earth line etc) can be checked by looking.

Features

- ●One-touch mounting to earth line or signal line (effective to mount to earth line with SPD)
- ●"Line" on display by passing lightning surge
- ●3 type lineup (S:1.25～3.5sq, M:5.5～8sq, L:14～38sq) for applicable cable diameter
- ●Non-power required, disposable product
- ●Patent product
- ●Trademark: SURGE PRINT

Surge memory SM-3A

Intergrates wave peak value of lightning surge current induced in a line and continuous time product as energy amount. SM-3A displays 3 ranges by input current value based on 10/200μs lightning surge waveform. Therefore, it estimates more current when longer than 10/200μs waveform, less current when shorter than 10/200μs waveform. There's the composition of a outside attachment CT and a plastic case built-in electronic counter. Current is powered by the lithium battery in the electronic counter. Non-maintainance usage.

Dimensions: W95×D158×H60 (mm) (Except projecting part of through terminal)
CT outer diameter φ50 inner diameter 15 thickness 28

■Characteristics

Item	Performance
Detection method	Integrating detected current by CT
Standard waveform	10/200μs
Detection current value	10A, 30A, 100A
Time resolution	50ms or more
Function	Operation check for each counter enabled by TEST switch. Reset function
Power	Lithium battery (battery life 5 years)

Surge monitor SM10-002

Detects the current waveform of lightning surge flow on line such as earth line etc. and measures detection time, peak current value, surge count value, electric charge.
※Electric charge is calculated from detected lightning surge current waveform.

Applications

- Observation and evaluation of lightning surge current invaded in commnucation equipment room
- Observation and record of lightning surge current in earth line
- Patent product

SM10-002

Dimensions: W122×D77×H39 (mm)

Features

- Calculating lightning surge detection time, peak current, surge count and electric charge and displaying on body screen
- Monitoring integrated value of electric charge, contact output enabled by set threshold value
- Data management by special software, CSV output enabled

■Characteristics

Item		Specification
Sensor		Split CT inner diameter ϕ20
Measurement current range		200A~10kA (Absolute value)
Resolution		10 bit
Measure-ment accuracy	peak value	Within ±10% (10/200μs 1kA)
	electric charge	Within ±20% (10/200μs 1kA)
Recording data		Detection time, peak current value, surge count value, electric charge, integrated value of electric charge
Maximum recording data number		256
Data display		Body screen ※
Communication interface		RS-232C
Power	DC power supply	DC24V (DC20V~DC28V)
	AC adaptor	DC5V
Alarm contact output		Non-voltage contact
Operating temparature		-10℃~+60℃
Operating humidity		90% or less, no consendation

※ Option: Special software, RS-232C cable
Installing software to customer's PC, Connecting SM10-002 with PC by RS-232C cable then numericial statement displayed on PC enabled

Wind turbine lightning measurement device SC-AT-WT-01

Calculates lightning peak current and records in a control unit. SC-AT-WT-01 can output lightning data.

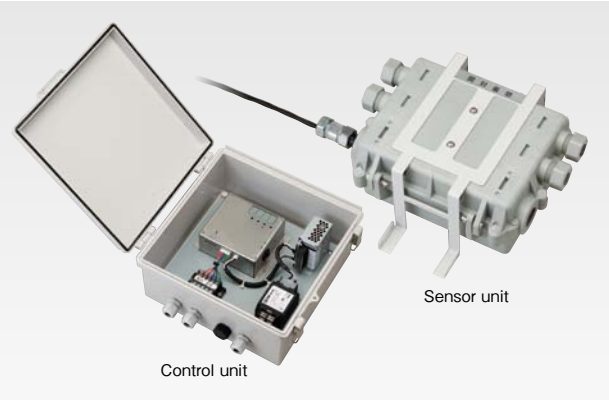

Features

- Sensor unit installed around lower part of wind tower body
- Transferring data which sensor unit records to control unit, calculating peak current
- Contact output of recording data in control unit
- Fixing sensor unit with steinless band to tower body
- Tower diameter 3.5m~4.5m enabled

■Configuration


Control unit external view

Control unit internal structure

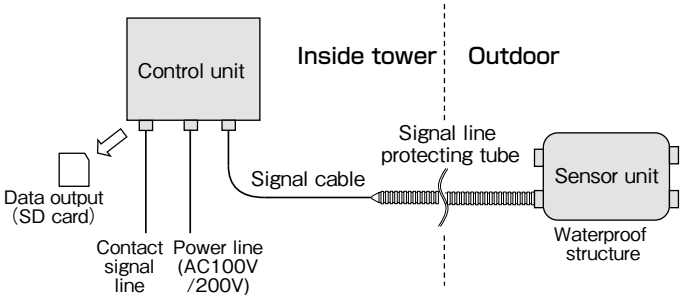

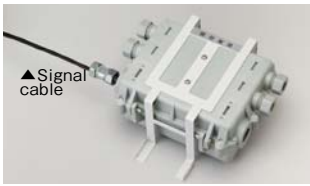

Sensor unit external view


Sensor unit installation

■Characteristic

Item	Performance
Sensor	Current detection sensor
Detection peak current range Accuracy	0.5kA~60kA (Tower body diameter 3.5m~3.9m) 0.5kA~80kA (Tower body diameter 4.0m~4.5m) ±30%
Time	Real time clock IC (Internal clock)
Accuracy of time	About 1 minute (Lunar equation)
Lightning information	・Current peak value (positive value irrespective of direction) ・Detection time
Power	AC100V, 200V
Other	・Drawing data from SD card ・None-voltage contact (Rating: DC30V, 1A) ・Trigger level selectable (500A,2kA,5kA,10kA,20kA) ・Tower diameter 3.5m~4.5m enabled

■Installation example

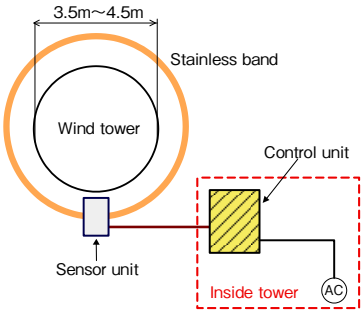

Small, light, and long-life obstruction light using LED

OM-6C medium intensity obstruction light (red)

OM-6C type medium intensity obstruction light (red) uses ultra-bright LED as its light source to provide greater conservation of electric power, a smaller and lighter body and a longer life, compared to the conventional light bulb system.

Mass: approx. 11 (kg)

Features

●Super long life (30,000 hours)
Using an LED as the light source enables the light's life to be extended. This allows reduction in maintenance and inspection when the lights are installed in high and dangerous locations, and also cuts down on maintenance labor costs.

●Small and light (less than 11kg)

●Low power consumption
By using ultra-bright LED, this product only uses 1/25 of electric power compared to the conventional light-bulb system light.

●Visibility
The flickers of LED are similar to those of light bulbs to give natural visibility.

■Characteristics

Item	Performance
Light source	Ultra-bright LED
Flood light	Emission with afterglow which is similar to light bulbs
Maximum luminosity	2000 cd (candela) ±25%
Rated input voltage	AC 100 V±10%
Effective power	35W±20%
Operating temperature	-30℃ to +50℃
Storage temperature	-30℃ to +60℃
Maximum wind speed	90 m/sec
Rated life	30,000 hours

■External view

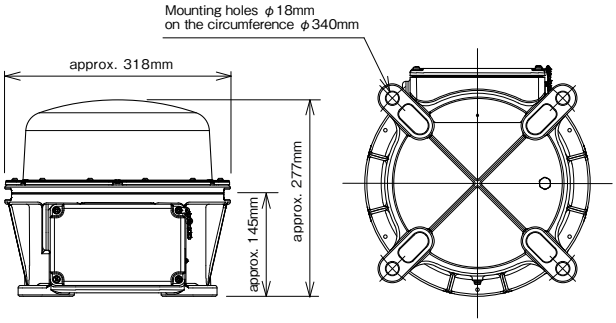

Longer life obstruction light using LED

OM-3C low intensity obstruction light

OM-3C type low intensity obstruction light uses LED as their light source, giving them longer life, low power consumption and compact size.

Mass: approx. 2.5 (kg)

Features

● Super long life (30,000 hours)
Using an LED as the light source enables the light's life to be extended. This allows a reduction in maintenance and inspection when the lights are installed in high and dangerous locations, and also cuts down on maintenance labor costs.

● Low power consumption
By using ultra-bright LED, this product is able to achieve low power consumption of less than 5W.

■Characteristics

Item	Performance
Light source	Ultra-bright LED
Flood light	Red fixed light
Maximum luminosity	32 cd (candela) or more
Rated input voltage	AC100V
Effective power	5W or less
Operating temperature	-30℃ to +45℃
Storage temperature	-30℃ to +50℃
Maximum wind speed	90 m/sec
Rated life	30,000 hours

■External view

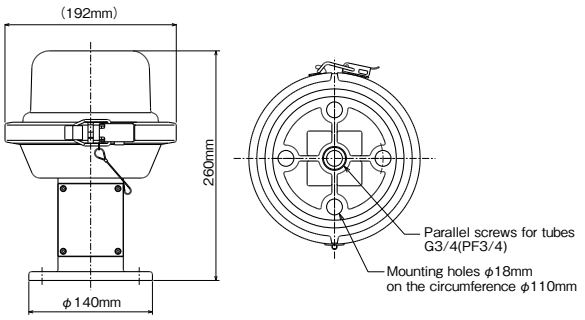

Obstruction Light that utilizes electrostatic induction from electrical power lines

OM-3B low intensity obstruction light

(Electrostatic induction method: SI method)

When overhead earth wires are partially insulated, electrostatically induced power can be drawn from power lines by the capacitance between the power lines and the insulated overhead ground wires (I GW). Obstruction light that uses electrical power obtained in this way as their power source are called electrostatic induction method obstruction light. In the electrostatic induction method, insulating the overhead ground wires makes it easy to extract electrical power, making it possible to install obstruction light in locations where it would be difficult to lay power lines, such as riverbeds and mountainous regions. Also, since the electrostatic induction method does not involve any connection to power lines, it is a safe method that does not allow general users to be affected by irregular voltage resulting from lightning strikes on towers, etc. Using power electrostatically induced from power lines to light obstruction light is extremely effective in saving energy, reducing installation costs and providing long life lighting.

Mass: approx. 8 (kg)

■Characteristics

Item	Performance
Light source	Red neon tube
Flood light	Red fixed light
Maximum luminosity	32 cd (candela) or more
Rated current	20mA
Frequency	50 Hz or 60Hz
Rated life	5,000 hours or more

■Sample configuration of electrostatic induction method

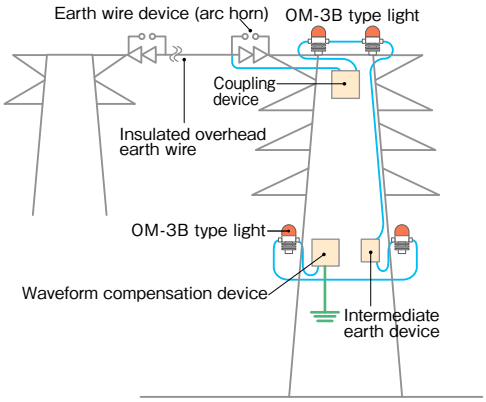

■External view

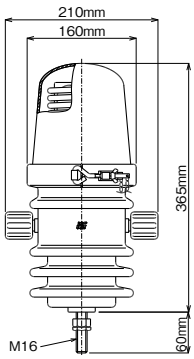

Solar power generated low intensity obstruction light system

This system uses energy obtained from solar panels to power energy-saving OM-3C obstruction light.
The system can be installed in mountainous regions and other locations where there is no commercial power supply available.

■system configuration

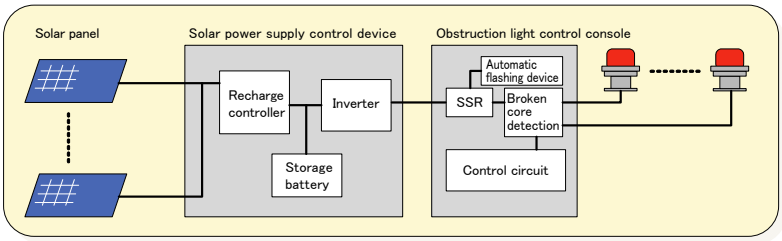

■Power supply control device installation example

■Solar power supply control device external view (example)

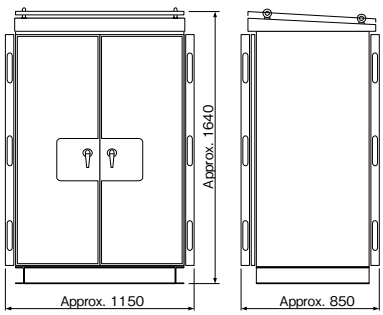

Basic information about lightning-1

1. How lightning happens

It was the German Winkler and the American Franklin that first expressed the notion that lightning was a release of electricity in the atmosphere. Franklin's famous kite experiment took place in 1752 (from: http: //www.ushistory.org/franklin/info/timeline.htm). Today, some 260 years later, thanks to the research of many people, we know much about the phenomenon that is lightning, but there is still much that we do not know.

1.1 Types of lightning

There are different types of lightning, depending on the cause of the lightning, but there are usually three main types.
In fact, lightning is often caused by a combination of factors, rather than a single factor.

(1) Heat lightning
Strong sunlight in midsummer produces hot air near the surface of the ground. This can result in updrafts which produce heat lightning.

(2) Frontal thunderstorms
When lightning is caused by the collision of a cold air mass with a warm air mass, this is called a frontal thunderstorm. The lightning that occurs when warm air is pushed upwards by cold air is called cold front lightning, and the lightning that occurs when warm air rises alongside the cold air of the lower strata is called cold front lightning (Figs. 1 and 2).

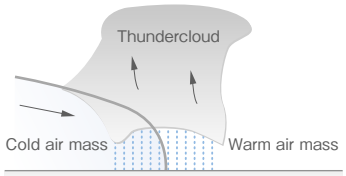

Figure1. Frontal thunderstorm (cold front thunderstorm)

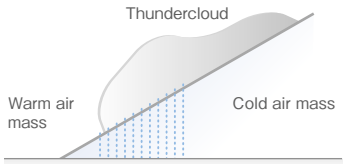

Figure2. Frontal thunderstorm (Warm front thunderstorm)

(3) Cyclonic thunderstorms
Cyclonic thunderstorms happen when there are updrafts in areas of low atmospheric pressure and near the center of typhoons and the like.

1.2 How thunderclouds occur

One of the most common features of clouds that produce lightning is the presence of strong updrafts extending to an altitude of several kilometers. The upper ranges of these updrafts reach altitudes where the temperature has fallen to below minus 20°C. Temperatures of minus 20°C occur in the Japanese summer at between 7 and 8 kilometers above the ground. In Hokuriku area in Japan, in winter, these temperatures occur at between 3 and 5 kilometers above the ground.
In the Japanese summer, heat lightning occurs in clouds whose tops are at between 8 and 16km high, and in winter in the north in clouds whose tops are between 4 and 6km high. In summer, in order for updrafts to occur, there needs to be hot and humid air near the ground, with a comparatively cold air mass above it. Summer days with strong sunshine are likely to cause heat lightning, and particularly when a cold front moves across the Japanese archipelago, heavy thunderstorms can occur. Also, spring lightning in winter along the Japan Sea coast, a great temperature difference is generated between the cold air mass coming from Siberia and the air temperature close to the surface of the sea, causing frequent lightning in the snow clouds during November and December.

1.3 How thunderclouds form, grow and then disperse

Thunderclouds are large cloud masses with a diameter of several kilometers. These are called cells. In fact, a thundercloud is very rarely only one cell, and usually comprises a cluster of several cells, and has a very complex overall structure.
Figure 3 shows a model that demonstrates how a single cell develops and eventually disperses.

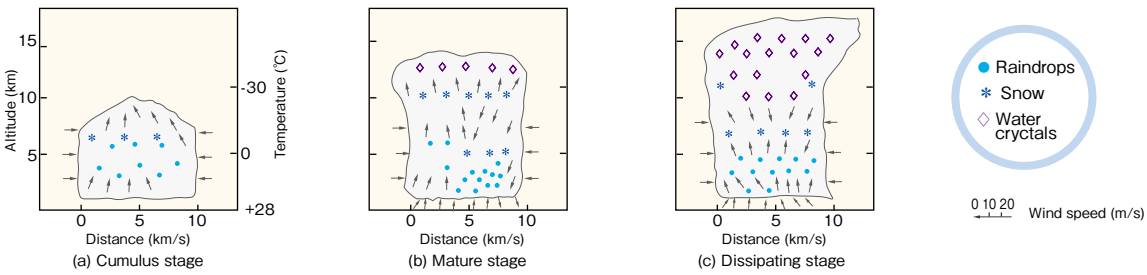

Figure 3 Thundercloud formation process

Cells in the cumulus stage are observed as vertically developing clouds that can attain a diameter of between 5 and 10 kilometers within 10 to 15 minutes, with a height of between 7 and 9 kilometers.
All of the air currents inside the cloud are updrafts. Cloud droplets grow within the cloud and large droplets of water and ice are formed and the cell continues to enlarge. This is the beginning of the mature stage, and clouds in this form are called cumulonimbus. Part of the cloud is dragged downwards by precipitation, creating downdrafts. During the mature stage, convection occurs due to the action of the updrafts and downdrafts.
The updrafts are as strong as the upper layer, reaching speeds of up to 30m/s. The top of the cloud can often be as high as around 12 kilometers, and some have been as high as 16 kilometers. Lightning discharge is most common during this period. The mature period can last between 15 to 30 minutes, after which the updrafts begin to fade away, leaving only the downdrafts. The cloud then enters the dissipating stage. The rain becomes weaker than in the mature stage, and stops after about 20 minutes.

Basic information about lightning-2

2. Structure of thunderclouds

2.1 Electrical charge distribution in thunderclouds

Figure 4 shows the electrical charge distribution inside a thundercloud in its mature stage. The positive charge is distributed widely at the top of the cloud, while the negative charge is distributed vertically, in a column.
Also, there are positive charges distributed locally near the base of the cloud.

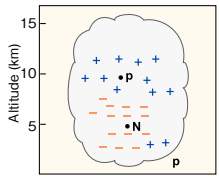

Fig. 4 Electrical charge distribution inside a thundercloud

2.2 Summer thunderclouds and winter thunderclouds

In winter, because the temperatures are low, thunderclouds form at relatively low altitudes of several kilometers, with the base of the thundercloud close to the ground. Close to the ground, the speed of rising air is affected by the ground surface and may be 5m per second or lower. Since this is lower than the 11m per second falling speed of the negatively charged graupel, which quickly falls to earth as soon as it is charged, it remains in the cloud for only a short period of time. Since it is difficult for negatively charged particles to build up in the cloud base, there is a great deal of positive discharge. Also, since the cloud base is quite low, upward discharge is often observed.

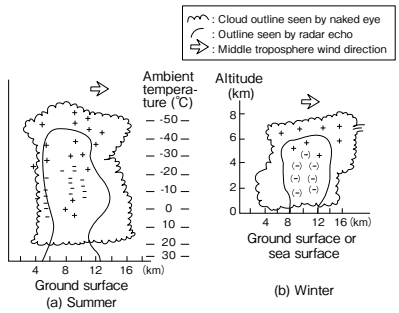

Figure 5. Summer and winter mature stage thundercloud sell charge distribution
(Kitagawa: From IEEJ Joint Research Materials on Discharge and High Voltage ED-90-134)

Basic information about lightning-3

3. Lightning discharge

The positively charged and negatively charged particles in a thundercloud separate, with the positively charged particles mainly in the upper portion of the cloud, and the negatively charged particles in the lower layers. When sufficient charge has accumulated, the limit is reached and the insulation in the air can hold out no longer. An electrical discharge occurs in order to neutralize the conditions. The discharge of positive and negative charge that occurs in the thundercloud at this point is called cloud discharge. The discharge between the electrical charge (mainly negative) in the cloud base and the charge induced in the ground surface is a ground discharge, and this is called cloud to cloud lightning.
In either case the electrical discharge is very large and the electropotential difference between the two poles just before the discharge can be anywhere from 100 million to 1 billion volts, with a charge neutralization of about 10 Coulomb (Source: representative values for lightning current parameters (logarithmic normal) taken from JIS Z 9290-4 table JB.1EC62305-1-CIGR), and a discharge path of up to several tens of kilometers.

Basic information about lightning-4

4. Lightning quantities

4.1 Thunderstorms

(1) Regional distribution of thunderstorm days
A map that shows where thunderstorm days have occurred is known as an IKL map (isokeraunic level map). Figure 6 shows an IKL map of Japan. The map shows the thunderstorm days occurring over a period of one year, on a regional grid with longitude and latitude divided every 15 degrees. Areas of frequent thunderstorms in Japan are the Hokuriku region, the mountain areas of northern Kanto, the areas around the Suzuka mountain range of the Kinki region, and those parts of Kita-Kyushu around the Hita basin.

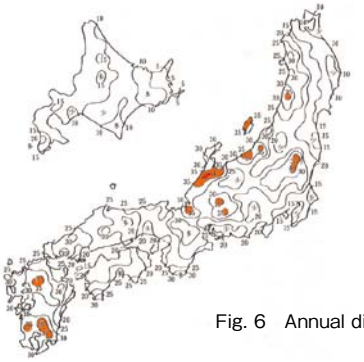

Frequent lightning areas in Japan

- Hokuriku	30 to 40 days
- Eastern Kanto	30 to 35 days
- Kita Kyushu	25 to 35 days

Fig. 6 Annual distribution of thunderstorm days (1954 to 1963)

(2) Density of lightning strikes to ground
One example of the relationship between IKL and the density of lightning strikes to ground Ng (number of lightning strikes to ground per square kilometer in one year) is shown in the following equation (1).

$$Ng = 0.1 \times IKL \text{ (strikes/ km}^2\text{/ year)} \quad (1)$$

(3) Monthly and hourly occurrence of thunderstorms
In Japan, thunderstorms occur most frequently in the months of July and August. Most of these are summer heat lightning. Hourly statistics show that summer heat lightning occurs mostly between the hours of 2pm and 4pm. Frontal thunderstorms that occur as the seasons change, and winter lightning in the Hokuriku region, do not exhibit any particular time characteristics.

Lightning surge occurrence and size-1

1. Lightning strikes

Lightning strikes to earth occur with the density expressed in the equation (1), above. There are no organized statistics that show exactly where lightning strikes occur, but tall towers, power transmission cables, lightning rods placed on tall buildings and structures and tall trees are often struck, as are people hillwalking or in wide open spaces such as sports fields and golf links, etc.

1.1 Lightning strikes to power transmission line

IIt has been proven that there is a correlation between power line lightning strike rates and IKL (number of thunderstorm days per year).
And, as shown in the figure 7, according to various statistics on the size of the lightning current, there are reports ranging from 5kA to 200kA.
Most of the lightning current is negatively charged, with wave peak lengths often between 2 and 4μs, and mostly within a 1 to 20μs range.
Wave tail lengths fall within a 10 to 100μs range.

1.2 Site surface area and lightning strike frequency

According to US statistics, for 30 thunderstorm days, in other words IKL30, there are on average four lightning strikes per year per square kilometer on flat ground.
Figure 8 shows various IKL as parameters of surface area and annual lighting strikes, given this rate of lightning.

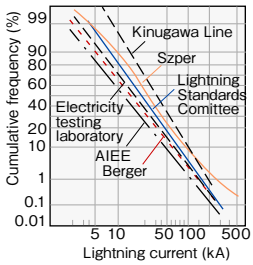

Fig. 7 Comparison of lightning current cumulative frequency distribution curves

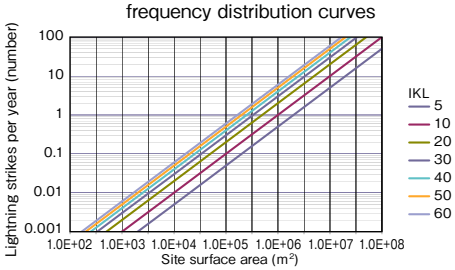

Fig. 8 Correlation between surface area and lightning strikes

Lightning surge occurrence and size-2

2. Induced lightning

Impulse voltage that is induced into overhead lines and other conductors after lightning discharge from cloud to ground or cloud to cloud is called induced lightning.

2.1 Induced lightning in communication lines

Koga et al.[*1] measured lightning surge voltage V induced onto communication lines in NTT's Utsunomiya region and showed the correlation between V and N, the cumulative occurrences of lightning surge voltage in excess of V per line, per single thunderstorm day, on subscriber terminals and station terminals, as per Figure 9. From the relationship illustrated in Figure 9, we can express the cumulative occurrences of lightning surge voltage in excess of V on subscriber terminals [times/ per line/ per thunderstorm day] Ns in the following equation..

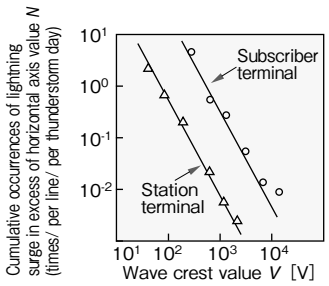

Figure 9 Occurrence distribution for lightning surge voltage on subscriber line systems

$$Ns = 0.6 \times 10^5 V^{-1.8} \quad (2)$$

Also, the cumulative occurrences of lightning surge voltage in excess of V on station terminals [times/ per line/ per thunderstorm day] No can be expressed in the following equation.

$$No = 0.36 \times 10^4 V^{-1.8} \quad (3)$$

For example, from the equation for subscriber terminals (2), the occurrences per thunderstorm day per line where V = 500V or more is Ns ≒ 0.83, and the occurrences per thunderstorm day per line where V = 3Kv or more is Ns ≒ 0.033. If we then look at IKL = 35 regions with frequent lightning, we find the annual numbers of lightning strikes are 29 and 1.16, respectively.

2.2 Induced lightning on power transmission lines and distribution lines[*2]

(1) Induced lightning on power transmission lines

If there is a lightning discharge in the vicinity of power transmission lines, lightning can be induced onto the power transmission lines, from whence it will run to the substation. The size of the lightning surge is proportional to the size of the electrical field generated by the lightning, and the height of the power transmission lines above the ground. According to measurements taken so far, induced lightning voltage can be as high as 400V, but is mostly 100kV or less.
The waveform is a gentle one, with a crest front of between 20 to 30μs, and wave tail length of between 50 to 200μs.

(2) Induced lightning on distribution lines[*3]

Induced lightning on distribution lines has been measured using induced lightning surge automatic measurement apparatus. According to these measurements, if the strike current of a lightning strike around 200m in the vicinity of distribution lines is of the order of several tens of thousands of amperes, then an induced lightning voltage of between 60 to 100kV may occur on the distribution lines. Figure 10 shows the waveform of a direct lightning strike, compared with that of an induced lightning surge.

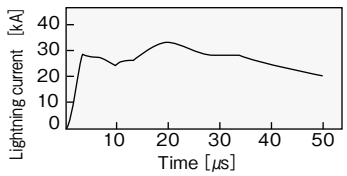

(a) Lightning current waveform of direct strike on chimney at Fukui Thermal Power Plant

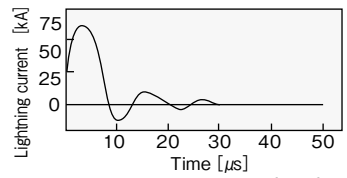

(b) Induced lightning voltage waveform from phase conductor on chimney of distribution power lines

Fig. 10 Lightning current waveform compared to induced lightning waveform

*(1) Koga et al.: Lightning surge waveform characteristics appearing on communication line terminals, Journal of IEICE (B), J64-B, 7, 627/634 (July, 1981)
(2) Fujita: Lightning damage design for super high voltage substations Electrical Field Technology June, 1981
(3) Mitani: Recent lightning observation and results Electrical Review July, 1981

Explanation of terms-1

1. Waveforms of impulse test voltage and current based on rules

1.1 Lightning impulse test voltage waveforms

The lightning full impulse-voltage waveforms prescribed by JEC-202 are as shown in Figure 11.

(1) Virtual zero time
This refers to the point where a straight line connecting the 30% crest point and 90% crest point in a wave front intersects the time axis.

(2) Wave front duration
This refers to the value obtained by dividing by 0.6, the time between the 30% wave crest and the 90% wave crest in a wave front. (see Fig. 11)

(3) Effective wave front steepness
Obtained by dividing the wave crest by the wave front duration.

(4) Wave tail duration
In the case of single polarity lightning impulse voltage, this refers to the time between virtual zero time and the half wave height point in a wave tail (see Fig.11), and in the case of oscillating lightning impulse voltage, the time between virtual zero time and the half wave height point in the first half wave tail.

(5) Test voltage waveform display
The following symbols are used to display the lightning impulse voltage waveform of the wave front T1 (μs) and wave tail T2 (μs).

$$\pm T_1 / T_2 \ (\mu s)$$

The plus and minus signs indicate the polarity of the voltage.
The standard lightning impulse voltage used in lightning impulse voltage tests is a ±1.2/50μs single polarity full waveform voltage.

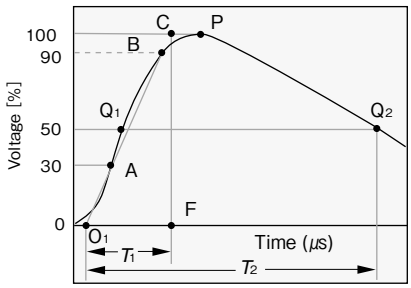

T_1 : Wave front duration T_2 : Wave tail duration
O_1 : Virtual zero time Q_1,Q_2 : Half wave height point
P : Wave crest $\overline{CF}$: Crest value
Fig. 11 Conventions of displaying impulse voltage

1.2 Impulse test current waveforms

The lightning full impulse current waveforms prescribed by JEC-202 are as shown in Figure 12.

(1) Virtual zero time
This refers to the point where a straight line connecting the 10% crest point and 90% crest point in a wave front intersects the time axis.

(2) Wave front duration
This refers to the value obtained by dividing by 0.8, the time between the 10% wave crest and the 90% wave crest in a wave front. (See Fig. 12)

(3) Effective wave front steepness
Obtained by dividing the wave crest by the wave front duration.

(4) Wave tail duration
In the case of single polarity impulse current, this refers to the time between virtual zero time and the half wave height point in a wave tail (see Fig. 12), and in the case of oscillating lightning impulse current, the time between virtual zero time and the half wave height point in the first half wave tail.

(5) Test current waveform display
The following symbols are used to display the impulse current waveform of the wave front T1 (μs) and wave tail T2 (μs).

$$\pm T_1 / T_2 \ (\mu s)$$

The plus and minus signs indicate the polarity of the current.
The standard impulse currents used in impulse current tests are±8/20μs and ±4/10μs.

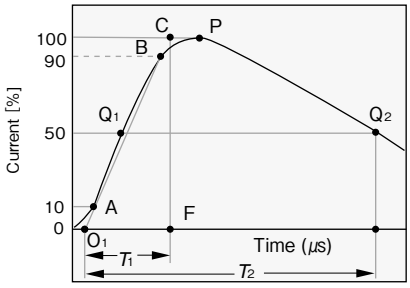

T_1 : Wave front duration T_2 : Wave tail duration
O_1 : Virtual zero time Q_1,Q_2 : Half wave height point
P : Wave crest $\overline{CF}$: Crest value
Fig. 12 Conventions of displaying impulse current

1.3 Protective device impulse test voltage and current waveforms

In impulse tests on communications protective devices, in addition to the standard waveforms, the ±10/700μs and ±10/1000μs long tailed waveforms, for when induced lightning surge on communication lines is envisaged, and others, are specified.

Explanation of terminology-2

2.Related terminology

Type of terminology	Explanation of terminology
Surge Protective Device (SPD)	Surge Protective Device: SPD This device is used to suppress excess voltage and to shunt surge current. Each device has one or more non-linear element built in. They are also known as protective devices, lightning arresters, surge protectors, etc.
Gas discharge tubes (GDT)	Discharge tubes designed to protect equipment and human beings from excess voltage by discharging into a sealed envelope, rather than into air gaps. Also known as arrester tubes.
Nominal discharge current In	Crest current value of 8/20μs current waveform flowing to SPD. Used in Class Ⅱ test SPD classification and in Class Ⅰ test and Class Ⅱ test SPD pre-processing.
Impulse current Iimp	Current crest value Ipeak and charge Q, tested in accordance with operating duty test procedures. Used to classify the SPD in Class Ⅰ test.
Maximum discharge current Imax	8/20 waveform current crest value flowing to SPD, with size according to Class Ⅱ testing operating duty test sequence. Imax is greater than In.
Maximum continuous operatingvoltage Uc	Maximum effective value or DC voltage that can be continuously applied to SPD in protect mode. Equivalent to rated voltage.
Follow current If	Supplied from power supply system, this is current that continues to flow to the SPD after the impulse current discharge has finished. Follow current is clearly different from continuous operating current Ic.
Rated load current IL	Maximum effective value or DC current that can be continuously applied to a load connected to an output being protected by SPD.
Voltage protection level Up	When the voltage across terminals is to be restricted, this is the parameter that specifies the performance of the SPD to be selected from the recommended value list. This value must be greater than the maximum measured limiting voltage. The maximum values measured between terminals.
Insertion loss (dB)	This is the loss that is generated when an SPD is inserted into a transmission system. This loss is the ratio between the power supplied to the load side before the SPD is inserted into the transmission system, and the power supplied after SPD insertion. It's usually measured by dB.
Series resistance (Ω)	This is the value of the resistance between the line terminals of the protective device and the equipment terminals (L1 – T1, L2 – T2).
DC sparkover voltage (V)	This is the voltage which starts the discharge (an electrical connection is made) when a gradually rising DC voltage is applied.
Impulse sparkover voltage (V)	This is the voltage which starts the discharge (an electrical connection is made) when a specific rising impulse voltage is applied.
Withstand voltage (V)	Refers to the upper limit of voltage that can be applied to a components for a specified time without destroying its insulation. There is an AC withstand voltage and an impulse withstand voltage.
Working attenuation (dB)	Refers to the attenuation of electrical signals resulting from the addition of a protective device.
Crosstalk attenuation (dB)	Across two or more lines, crosstalk is the phenomenon where the signals from one line leak onto other lines, electrostatically or electromagnetically coupled. The ratio between the magnitude of the transmitted signal and the signal leaked onto the transmission terminal side is called near-end crosstalk attenuation. The ratio between the magnitude of the transmitted signal at the receiving terminal side and the signal leaked onto the receiving terminal side is called far-end crosstalk attenuation.
Return loss (dB)	Refers to the level of rebound wave (echo) generated at the characteristic impedance mismatch point at telecommunication cable contacts, etc. Allows the level of characteristic impedance mismatch within cables and at cable connections to be viewed.
Impedance (Ω)	Refers to the impedance of transmission characteristics measurement. Telecommunications transformers read "Line side xxΩ, Device side xxΩ".
Impedance ratio (Ω)	Used in telecommunications transformers. Expressed as "Line side xxΩ, Device side xxΩ".
Leakage current (μA)	Current that flows when maximum line voltage is applied to a protective device.
Earth-free system	A system wherein earthing is not considered necessary because the lightning current flows from the telecommunication lines to the power supply lines, or in reverse.
Frequency bandwidth (Hz)	The frequency bandwidth that a protective device can use.
V.S.W.R.	When travelling waves are reflected at a contact with different impedances, the travelling waves are affected by the returning waves and a composite wave is generated on the line. This is called a standing wave. The ratio of the standing wave maximum voltage (Vmax) to minimum voltage (Vmin) is called the Voltage Standing Wave Ratio (VSWR). In the case of no reflection, VSWR is 1, and the smaller this value becomes, the less reflection there is.
Contact resistance (Ω)	Resistance generated at the connectors and other contacts of a protective device.
Line voltage (V)	This is voltage that is generated across T1 – T2 due to operating differences among protective elements when SPD begin to operate, triggered by irregular voltage to earth caused by unbalanced lines.
Permissible power (W)	Maximum permissible power that can be passed through co-axial lightning arresters.

SANKOSHA proposes industry-leading lightning protection solutions.
Don't hesitate to talk to us.

SANKŌSHA

SANKOSHA Corporation: 4-3-8 Osaki, Shinagawa-ku, Tokyo 141-0032, Japan

Phone +81-3-3491-7167
Fax +81-3-3494-7574

http://www.sankosha.co.jp/en E-mail info@sankosha.co.jp

- For printing reasons, the colors shown in the catalog may differ from those of the actual products.
- Thank you in advance for understanding that product specifications and external appearance may sometimes undergo slight changes for the sake of improvement.

The content of this catalog is correct as of January, 2017.

AD-99/17.01